REPLACE ROOF, COMMUNICATION BUILDING
IJO NO. DP 847D1J

Dugway Proving Ground
DPG

U.S. ARMY
DUGWAY PROVING GROUND

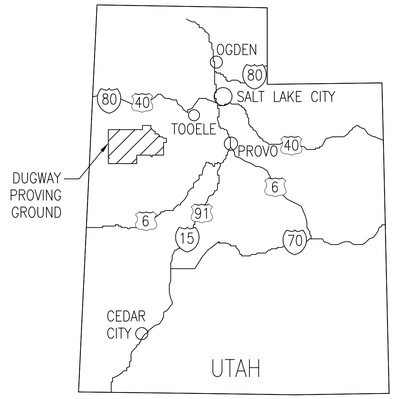

DESCRIPTION OF WORK:

DESIGN, FURNISH AND INSTALL NEW STANDING SEAM METAL ROOF FOR BUILDING INCLUDING ALL AREAS AS DESIGNATED BY DRAWINGS. REMOVE AND DISPOSE OF EXISTING ROOFING MATERIAL, INSULATION, RAIN GUTTERS, AND DOWNSPOUTS AS NEEDED TO INSTALL NEW ROOF. FURNISH AND INSTALL NEW RAIN GUTTERS AND DOWNSPOUTS. REMOVE AND DISPOSE OF EXISTING ROOF-MOUNT CONDENSING UNIT AND ACCOMPANYING PROPANE LINES AND REFRIGERANT LINE-SETS. FURNISH AND INSTALL NEW HVAC SPLIT SYSTEMS IN ROOMS AS NOTED HEREIN. REMOVE AND DISPOSE OF EXISTING PROPANE TANK AND FENCE ON GROUND ON THE NORTH SIDE OF BUILDING. REPAIR AND PATCH AREAS OF EXISTING BUILDING WITH STUCCO SYSTEM TO MATCH AND FLUSH OUT WITH EXISTING BUILDING. FURNISH AND INSTALL NEW INSULATION. INCLUDES ANY INCIDENTAL WORK.

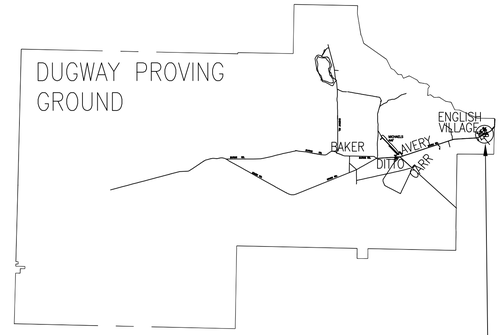

DRAWING INDEX

SHEET #	SHEET	DRAWING TITLE
		GENERAL
1	G-001	COVER SHEET
		CIVIL
2	C-101	SITE PLAN
		ARCHITECTURAL
4	A-101	PLAN VIEW
5	A-102	ELEVATION VIEW
6	A-201	ELEVATION VIEW
7	A-202	ELEVATION VIEW
8	A-501	DETAILS

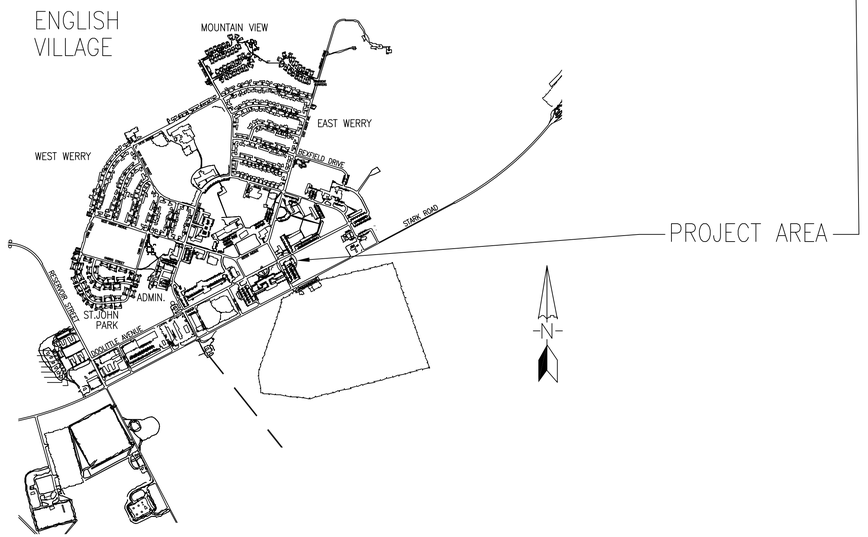

VICINITY MAP

DESIGN 65%

Symb.	Description	Date	App.
1	35% CONCEPT	XX/XX/XX	

Drawn by: AJM
Date: 06/26/13
Date Approved: 06/XX/13
Rev. A
Checked by: CWM
Spec No.: 847D1J
Design file no: --
Project Superintendent: --
Drawing Code: 65% DESIGN
Chief Engineer: LINCOLN BAHR
Dwg scale: AS NOTED

C. MARTIN COMPANY INC.
ENGINEERING
U.S. ARMY CONTRACTOR
P.O.BOX 478, BLDG. 5474
DUGWAY, UTAH 84022
DEPARTMENT OF THE ARMY
DIRECTORATE OF PUBLIC WORKS
DUGWAY PROVING GROUND

U.S. ARMY DUGWAY PROVING GROUND UTAH
REPLACE ROOF
COMMUNICATIONS BUILDING
COVER SHEET

SHEET REFERENCE NUMBER:
G-001
Sheet 1 of 7

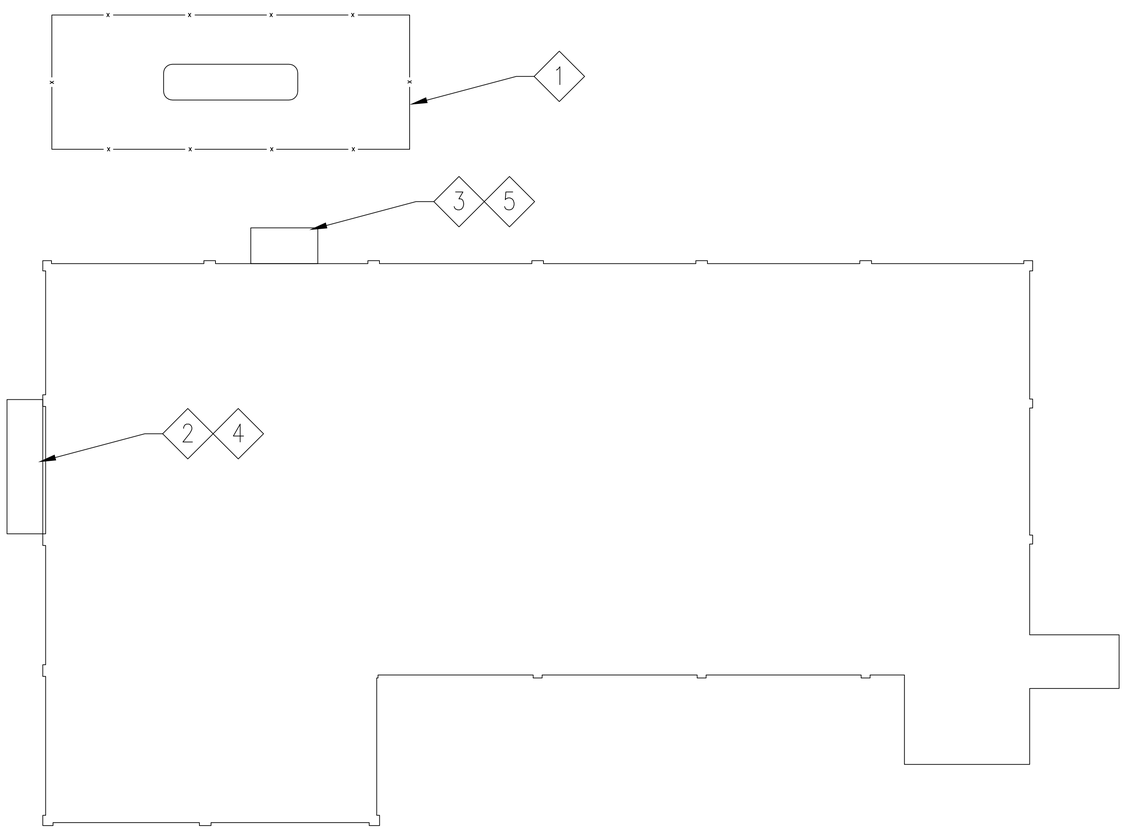

SITE PLAN
SCALE: 1/8" = 1'-0"

GENERAL NOTES

1. GENERAL CONTRACTOR SHALL VERIFY ALL DIMENSIONS AND CONDITIONS AT JOB SITE AND BE FULLY RESPONSIBLE FOR SAME.
2. GENERAL CONTRACTOR SHALL VERIFY AND BE RESPONSIBLE FOR EACH AND EVERY EXISTING ROOF PENETRATION EVEN IF IT IS NOT SHOWN ON THE PLANS, AND INSTALL THE NEW ROOF AND FLASH AROUND THE PENETRATIONS AS REQUIRED BY THE STANDING SEAM ROOF MANUFACTURER.
3. GENERAL CONTRACTOR SHALL VISIT THE SITE SO AS TO BE FAMILIAR WITH ALL EXISTING CONDITIONS. BRING ANY QUESTIONS OR CONCERNS TO THE ATTENTION OF THE GOVERNMENT CONTRACTING OFFICER FOR CLARIFICATION, FOR ADDENDUM PRIOR TO BID OPENING. NO ALLOWANCES WILL BE MADE FOR CONDITIONS THAT ARE CLEARLY VISIBLE.
4. ALL SAFETY STANDARDS AND REQUIREMENTS ARE THE RESPONSIBILITY OF THE GENERAL CONTRACTOR.
5. GENERAL CONTRACTOR IS RESPONSIBLE TO KEEP BUILDING WATERTIGHT AT ALL TIMES. STARTING FROM NOTICE TO PROCEED TO SUBSTANTIAL COMPLETION ANY DAMAGE TO THE BUILDING OR ITS CONTENTS SHALL BE THE RESPONSIBILITY OF THE GENERAL CONTRACTOR TO REPAIR.
6. ITEMS DESIGNATED IN KEYNOTES ARE SHOWN IN APPROXIMATE LOCATIONS.
7. ALL DIMENSIONS AND QUANTITIES SHOWN ARE APPROXIMATIONS.
8. EXISTING UTILITY LINES ARE SHOWN IN APPROXIMATE LOCATIONS. EXACT DEPTHS ARE UNKNOWN. CONTRACTOR IS RESPONSIBLE TO REPAIR OR REPLACE ANY MARKED LINES THAT ARE DAMAGED DURING CONSTRUCTION.

KEYNOTES

1. REMOVE AND DISPOSE OF FENC, LPG TANK, AND CONCRETE PAD.
2. FURNISH AND INSTALL 4'X15' CONCRETE PAD.
3. FURNISH AND INSTALL 4'X8' CONCRETE PAD
4. FURNISH AND INSTALL _____ TON AND _____ TON COMPRESSOR UNITS.
5. FURNISH INSTALL _____ TON COMPRESSOR UNITS.

0 4' 8' 16'
SCALE:1/8" = 1'

Symb.	Description	Date	App.
1	35% CONCEPT	XX/XX/XX	

Rev. A

Date Approved: 06/XX/13
Design file no: --
Drawing Code: 65% DESIGN
Dwg scale: AS NOTED

Date: 06/26/13
Spec No.: 847D1J

Drawn by: AJM
Checked by: LPB
Project Superintendent: --
Chief Engineer: LINCOLN BAHR

C. MARTIN COMPANY INC.
ENGINEERING
U.S. ARMY CONTRACTOR
P.O. BOX 474
DUGWAY, UTAH 84022-0474
DEPARTMENT OF THE ARMY
DIRECTORATE OF PUBLIC WORKS
DUGWAY PROVING GROUND

U.S. ARMY DUGWAY PROVING GROUND UTAH
REPLACE ROOF
COMMUNICATIONS BUILDING
EXISTING ARCHITECTURAL PLAN

SHEET REFERENCE NUMBER:
C-101
Sheet 2 of 6

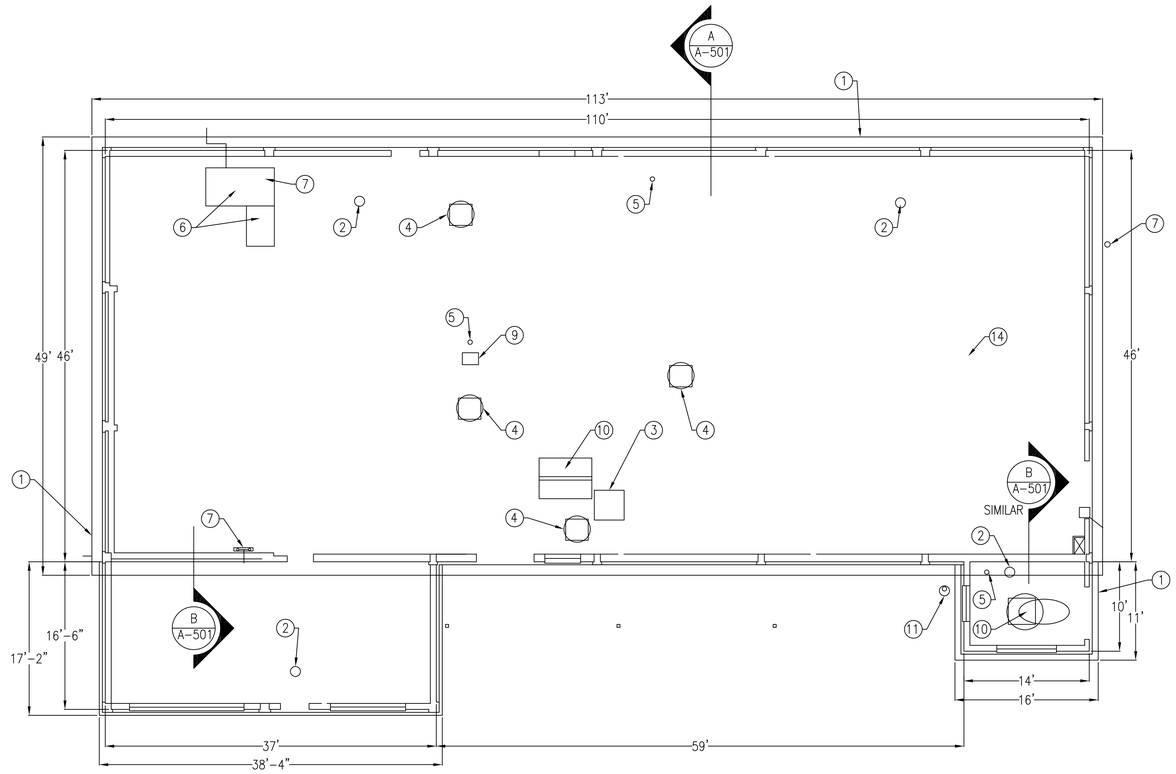

EXISTING ARCHITECTURAL PLAN

SCALE: 1/8" = 1'-0"

GENERAL NOTES

1. GENERAL CONTRACTOR SHALL VERIFY ALL DIMENSIONS AND CONDITIONS AT JOB SITE AND BE FULLY RESPONSIBLE FOR SAME.
2. GENERAL CONTRACTOR SHALL VERIFY AND BE RESPONSIBLE FOR EACH AND EVERY EXISTING ROOF PENETRATION EVEN IF IT IS NOT SHOWN ON THE PLANS, AND INSTALL THE NEW ROOF AND FLASH AROUND THE PENETRATIONS AS REQUIRED BY THE STANDING SEAM ROOF MANUFACTURER.
3. GENERAL CONTRACTOR SHALL VISIT THE SITE SO AS TO BE FAMILIAR WITH ALL EXISTING CONDITIONS. BRING ANY QUESTIONS OR CONCERNS TO THE ATTENTION OF THE GOVERNMENT CONTRACTING OFFICER FOR CLARIFICATION, FOR ADDENDUM PRIOR TO BID OPENING. NO ALLOWANCES WILL BE MADE FOR CONDITIONS THAT ARE CLEARLY VISIBLE.
4. THE PROJECT SCOPE INDLUDES ALL INCIDENTAL RELATED WORK.
5. ALL SAFETY STANDARDS AND REQUIREMENTS ARE THE RESPONSIBILITY OF THE GENERAL CONTRACTOR.
6. GENERAL CONTRACTOR IS RESPONSIBLE TO KEEP BUILDING WATERTIGHT AT ALL TIMES. STARTING FROM NOTICE TO PROCEED TO SUBSTANTIAL COMPLETION ANY DAMAGE TO THE BUILDING OR ITS CONTENTS SHALL BE THE RESPONSIBILITY OF THE GENERAL CONTRACTOR TO REPAIR.
7. ITEMS DESIGNATED IN KEYNOTES ARE SHOWN IN APPROXIMATE LOCATIONS.
8. ALL DIMENSIONS AND QUANTITIES SHOWN ARE APPROXIMATIONS.
9. EXISTING UTILITY LINES ARE SHOWN IN APPROXIMATE LOCATIONS. EXACT DEPTHS ARE UNKNOWN. CONTRACTOR IS RESPONSIBLE TO REPAIR OR REPLACE ANY MARKED LINES THAT ARE DAMAGED DURING CONSTRUCTION.

KEY NOTES

1. REMOVE AND DISPOSE OF EXISTING ROOFING MATERIAL AS NEEDED IN ORDER TO PROPERLY INSTALL NEW STANDING SEAM METAL ROOF. THIS MAY INCLUDE BUT NOT BE LIMITED TO INSULAITON, PERMINETER FLASHING, AND BUILT UP GRAVEL BALLAST.
2. EXISTING ROOF DRAIN TO REMAIN.
3. EXTEND EXISTING CHIMNEY STACK 24" MIN. ABOVE NEW RIDGE AND 36" MIN. ABOVE ADJACENT FRESH AIR INTAKES. FLASH AROUND AND FURNISH AND INSTALL CRICKET ON THE UP SIDE.
4. EXTEND EXISTING EXHAUST VENTS AND FANS ABOVE NEW ROOF. FLASH AROUND AND FURNISH AND INSTALL CRICKET ON THE UP SIDE. DEMOLISH, REMOVE, AND PATCH ANY VENTS THAT ARE NO LONGER USED.
5. 2-1/2" PIPE VENT, EXTEND TO ABOVE NEW ROOF AND FURNISH AND INSTALL NEW BOOT. SEE DETAIL C/A-501.
6. EXISTING AIR HANDLER AND CONDENSER TO BE REMOVED AND HOLES IN ROOF TO BE PATCHED. CONTRACTOR SHALL REMOVE AND SET ON GROUND. WEIGHT IS UNKNOWN. NOTIFY THE BASE OPS CONTRACTOR C.MARTIN COMPANY AFTER ON GROUND.
7. REMOVE EXISTING ANTENNAS AND REINSTALL ON GABLE END AT EAVE AS SHOWN ON SHEET A-201.
8. NOT USED
9. EXISTING FRESH AIR VENT, EXTEND 24" ABOVE NEW R-49 INSULATION AND PROVIDE BIRD SCREEN.
10. EXISTING AIR INTAKE, EXTEND 24" ABOVE NEW R-49 INSULATION AND PROVIDE BIRD SCREEN.
11. EXTEND GENERATOR EXHAUST PIPE ABOVE NEW ROOF EAVE.

0 4' 8' 16'

SCALE:1/8" = 1'

Symb.	Description	Date	App.
1	35% CONCEPT	XX/XX/XX	

Date Approved: 06/XX/13 | Rev.: A
Design file no: -- | Drawing Code: 65% DESIGN
Dwg scale: AS NOTED

Drawn by: AJM | Date: 06/26/13
Checked by: LPB | Spec No.: 8477D1J
Project Superintendent: -- | Chief Engineer: LINCOLN BAHR

C. MARTIN COMPANY INC.
ENGINEERING
U.S. ARMY CONTRACTOR
FACTORY ROAD, BLDG. 5474
DUGWAY, UTAH 84022
DEPARTMENT OF THE ARMY
DIRECTORATE OF PUBLIC WORKS
DUGWAY PROVING GROUND

U.S. ARMY DUGWAY PROVING GROUND UTAH
REPLACE ROOF
COMMUNICATIONS BUILDING
EXISTING ARCHITECTURAL PLAN

SHEET REFERENCE NUMBER:
A-101
Sheet 2 of 6

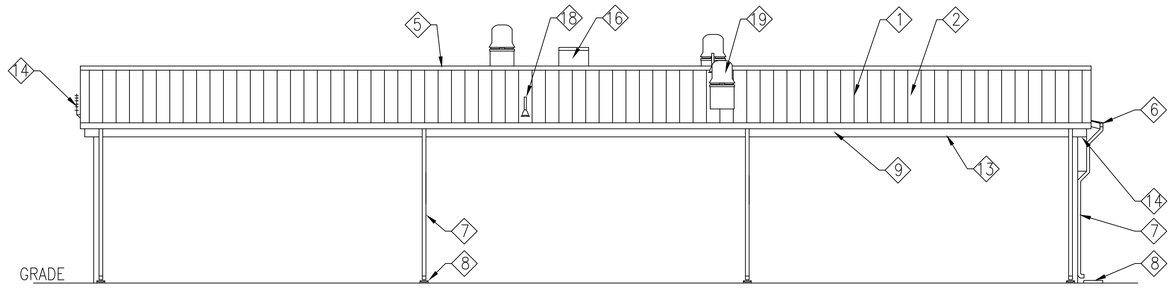

ELVATION NORTH SIDE

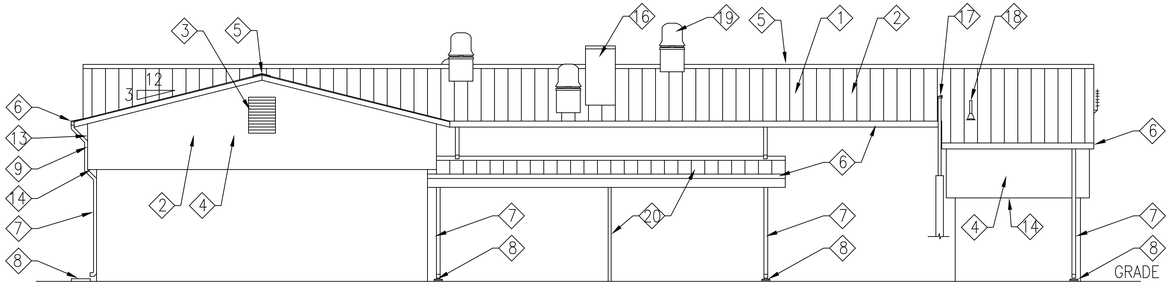

ELVATION SOUTH SIDE

MODIFIED ARCHITECTURAL PLAN

SCALE: 1/8" = 1'-0"

GENERAL NOTES

1. GENERAL CONTRACTOR SHALL VERIFY ALL DIMENSIONS AND CONDITIONS AT JOB SITE AND BE FULLY RESPONSIBLE FOR SAME.
2. GENERAL CONTRACTOR SHALL VERIFY AND BE RESPONSIBLE FOR EACH AND EVERY EXISTING ROOF PENETRATION EVEN IF IT IS NOT SHOWN ON THE PLANS, AND INSTALL THE NEW ROOF AND FLASH AROUND THE PENETRATIONS AS REQUIRED BY THE STANDING SEAM ROOF MANUFACTURER.
3. GENERAL CONTRACTOR SHALL VISIT THE SITE SO AS TO BE FAMILIAR WITH ALL EXISTING CONDITIONS. BRING ANY QUESTIONS OR CONCERNS TO THE ATTENTION OF THE GOVERNMENT CONTRACTING OFFICER FOR CLARIFICATION, FOR ADDENDUM PRIOR TO BID OPENING. NO ALLOWANCES WILL BE MADE FOR CONDITIONS THAT ARE CLEARLY VISIBLE.
4. ALL SAFETY STANDARDS AND REQUIREMENTS ARE THE RESPONSIBILITY OF THE GENERAL CONTRACTOR.
5. GENERAL CONTRACTOR IS RESPONSIBLE TO KEEP BUILDING WATERTIGHT AT ALL TIMES. STARTING FROM NOTICE TO PROCEED TO SUBSTANTIAL COMPLETION ANY DAMAGE TO THE BUILDING OR ITS CONTENTS SHALL BE THE RESPONSIBILITY OF THE GENERAL CONTRACTOR TO REPAIR.
6. ITEMS DESIGNATED IN KEYNOTES ARE SHOWN IN APPROXIMATE LOCATIONS.
7. ALL DIMENSIONS AND QUANTITIES SHOWN ARE APPROXIMATIONS.
8. EXISTING UTILITY LINES ARE SHOWN IN APPROXIMATE LOCATIONS. EXACT DEPTHS ARE UNKNOWN. CONTRACTOR IS RESPONSIBLE TO REPAIR OR REPLACE ANY MARKED LINES THAT ARE DAMAGED DURING CONSTRUCTION.
9. THE COLOR OF THE NEW STANDING SEAM METAL ROOF SHALL MATCH AS NEAR AS POSSIBLE TERRA COTTA CR, E=.35, BY THE GARLAND CO., OR APPROVED EQUAL UNLESS DIRECTED OTHERWISE BY THE GOVERNMENT.
10. SEE DETAIL H/A-502 FOR PROFILE OF NEW ROOF.

KEY NOTES

1. FURNISH AND INSTALL NEW STANDING SEAM ROOF BY STANDING SEAM ROOF MANUFACTURER.
2. FURNISH AND INSTALL NEW FRAMING BY STANDING SEAM ROOF MANUFACTURER.
3. FURNISH AND INSTALL NEW GABLE END VENT BY STANDING SEAM ROOF MANUFACTURER.
4. FURNISH AND INSTALL NEW GABLE END FACE PANELS BY STANDING SEAM ROOF MANUFACTURER.
5. FURNISH AND INSTALL NEW RIDGE VENT.
6. FURNISH AND INSTALL NEW RAIN GUTTERS. THE EDGE OF THE GUTTER OPPOSITE THE SIDE OF THE ROOF SHALL EXTEND 1" ABOVE THE EAVES. FURNISH AND INSTALL REINFORCEMENT STRAP ON GUTTER TO TOP OF STANDING SEAM ROOF AT EVERY PANEL JOINT, TWO FEET MAXIMUM.
7. FURNISH AND INSTALL NEW DOWN SPOUT, MAX. SPACING BETWEEN DOWN SPOUTS SHALL BE 36'-0".
8. REUSE EXISTING OR FURNISH AND INSTALL NEW PRECAST CONCRETE SPLASH BLOCK, AT EACH DOWN SPOUT, TYP.
9. FURNISH AND INSTALL FASCIA PANELS BY STANDING SEAM ROOF MANUFACTURER.
10. FURNISH AND INSTALL NEW R-49 INSULATION, TO GO ABOVE AND COVER ENTIRE EXISTING ROOF DECK.
11. REINFORCEMENT STRAP FROM RAIN GUTTER TO TOP OF RIB ON STANDING SEAM ROOF AT EVERY RIB.
12. REINSTALL EXISTING ANTENNA AT GABLE END BY EAVE. FURNISH AND INSTALL BRACKET AND REINFORCING AS REQUIRED FOR ANTENNA. FURNISH AND INSTALL NEW JUNCTION BOX, SPLICE, AND CAT5 WIRE AND DO ALL SPLICING. MAKE SPLICE INSIDE BUILDING.
13. PROVIDE SOFFIT VENTS AT EVERY OTHER PANEL, BY STANDING SEAM ROOF MANUFACTURER.
14. FURNISH AND INSTALL SOFFIT PANELS, BY STANDING SEAM MANUFACTURER. EVERY OTHER PANEL SHALL HAVE A VENT.
15. FURNISH AND INSTALL NEW LOUVERED ACCESS DOOR.
16. EXTEND CHIMNEY STACK 24" MIN. ABOVE NEW RIDGE AND 36" MIN. ABOVE ADJACENT FRESH AIR INTAKES.
17. EXTEND GENERATOR EXHAUST PIPE ABOVE NEW ROOF EAVE.
18. EXTEND EXISTING PLUMBING VENTS THROUGH NEW ROOF.
19. EXTEND EXISTING EXHAUST VENTS THROUGH NEW ROOF.
20. FURNISH AND INSTALL AWNING TO PROTECT EXISTING MECHANICAL EQUIPMENT. INCLUDING REQUIRED FOOTINGS, COLUMNS, CONNECTIONS, AND FLASHING TO BUILDING.

0 4' 8' 16'

SCALE:1/8" = 1'

Symb.	Description	Date	App.
1	35% CONCEPT	XX/XX/XX	

C. MARTIN COMPANY INC.
ENGINEERING

Drawn by: AJM
Checked by: LPB
Project Superintendent: ---
Chief Engineer: LINCOLN BAHR

Date: 06/26/13
Spec No.: 847D1J

Date Approved: 06/XX/13
Design file no: ---
Drawing Code: 65% DESIGN
Dwg scale: AS NOTED

U.S. ARMY CONTRACTOR
P.O. BOX 5474
DUGWAY, UTAH 84022

DEPARTMENT OF THE ARMY
DIRECTORATE OF PUBLIC WORKS
DUGWAY PROVING GROUND

U.S. ARMY DUGWAY PROVING GROUND UTAH

REPLACE ROOF
COMMUNICATIONS BUILDING
MODIFIED ARCHITECTURAL PLAN

SHEET REFERENCE NUMBER:
A-102
Sheet 3 of 6

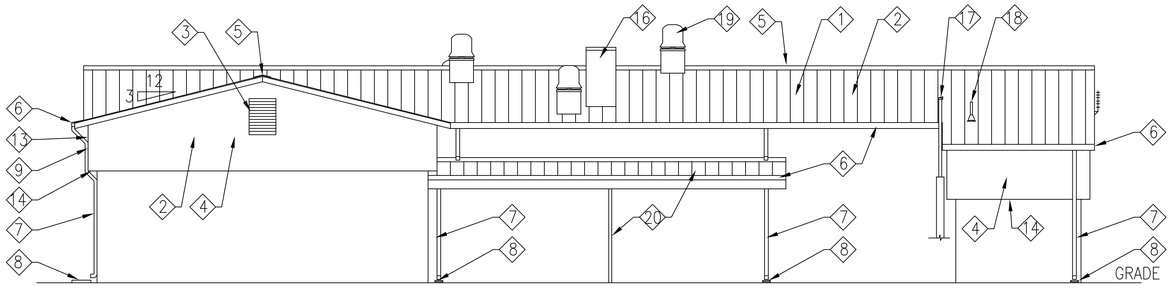

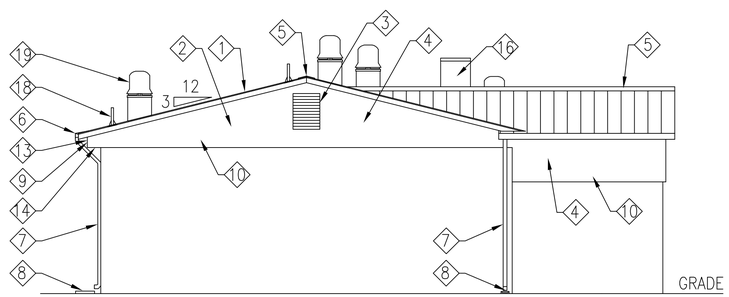

MODIFIED ARCHITECTURAL ELEVATIONS

SCALE: 1/8" = 1'-0"

GENERAL NOTES

1. GENERAL CONTRACTOR SHALL VERIFY ALL DIMENSIONS AND CONDITIONS AT JOB SITE AND BE FULLY RESPONSIBLE FOR SAME.
2. GENERAL CONTRACTOR SHALL VERIFY AND BE RESPONSIBLE FOR EACH AND EVERY EXISTING ROOF PENETRATION EVEN IF IT IS NOT SHOWN ON THE PLANS, AND INSTALL THE NEW ROOF AND FLASH AROUND THE PENETRATIONS AS REQUIRED BY THE STANDING SEAM ROOF MANUFACTURER.
3. GENERAL CONTRACTOR SHALL VISIT THE SITE SO AS TO BE FAMILIAR WITH ALL EXISTING CONDITIONS. BRING ANY QUESTIONS OR CONCERNS TO THE ATTENTION OF THE GOVERNMENT CONTRACTING OFFICER FOR CLARIFICATION, FOR ADDENDUM PRIOR TO BID OPENING. NO ALLOWANCES WILL BE MADE FOR CONDITIONS THAT ARE CLEARLY VISIBLE.
4. ALL SAFETY STANDARDS AND REQUIREMENTS ARE THE RESPONSIBILITY OF THE GENERAL CONTRACTOR.
5. GENERAL CONTRACTOR IS RESPONSIBLE TO KEEP BUILDING WATERTIGHT AT ALL TIMES. STARTING FROM NOTICE TO PROCEED TO SUBSTANTIAL COMPLETION ANY DAMAGE TO THE BUILDING OR ITS CONTENTS SHALL BE THE RESPONSIBILITY OF THE GENERAL CONTRACTOR TO REPAIR.
6. ITEMS DESIGNATED IN KEYNOTES ARE SHOWN IN APPROXIMATE LOCATIONS.
7. ALL DIMENSIONS AND QUANTITIES SHOWN ARE APPROXIMATIONS.
8. EXISTING UTILITY LINES ARE SHOWN IN APPROXIMATE LOCATIONS. EXACT DEPTHS ARE UNKNOWN. CONTRACTOR IS RESPONSIBLE TO REPAIR OR REPLACE ANY MARKED LINES THAT ARE DAMAGED DURING CONSTRUCTION.
9. THE COLOR OF THE NEW STANDING SEAM METAL ROOF SHALL MATCH AS NEAR AS POSSIBLE TERRA COTTA CR, E=.35, BY THE GARLAND CO., OR APPROVED EQUAL UNLESS DIRECTED OTHERWISE BY THE GOVERNMENT.
10. SEE DETAIL H/A-502 FOR PROFILE OF NEW ROOF.

KEY NOTES

1. FURNISH AND INSTALL NEW STANDING SEAM ROOF BY STANDING SEAM ROOF MANUFACTURER.
2. FURNISH AND INSTALL NEW FRAMING BY STANDING SEAM ROOF MANUFACTURER.
3. FURNISH AND INSTALL NEW GABLE END VENT BY STANDING SEAM ROOF MANUFACTURER.
4. FURNISH AND INSTALL NEW GABLE END FACE PANELS BY STANDING SEAM ROOF MANUFACTURER.
5. FURNISH AND INSTALL NEW RIDGE VENT.
6. FURNISH AND INSTALL NEW RAIN GUTTERS. THE EDGE OF THE GUTTER OPPOSITE THE SIDE OF THE ROOF SHALL EXTEND 1" ABOVE THE EAVES. FURNISH AND INSTALL REINFORCEMENT STRAP ON GUTTER TO TOP OF STANDING SEAM ROOF AT EVERY PANEL JOINT, TWO FEET MAXIMUM.
7. FURNISH AND INSTALL NEW DOWN SPOUT, MAX. SPACING BETWEEN DOWN SPOUTS SHALL BE 36'-0".
8. REUSE EXISTING OR FURNISH AND INSTALL NEW PRECAST CONCRETE SPLASH BLOCK, AT EACH DOWN SPOUT, TYP.
9. FURNISH AND INSTALL FASCIA PANELS BY STANDING SEAM ROOF MANUFACTURER.
10. FURNISH AND INSTALL NEW R-49 INSULATION, TO GO ABOVE AND COVER ENTIRE EXISTING ROOF DECK.
11. REINFORCEMENT STRAP FROM RAIN GUTTER TO TOP OF RIB ON STANDING SEAM ROOF AT EVERY RIB.
12. REINSTALL EXISTING ANTENNA AT GABLE END BY EAVE. FURNISH AND INSTALL BRACKET AND REINFORCING AS REQUIRED FOR ANTENNA. FURNISH AND INSTALL NEW JUNCTION BOX, SPLICE, AND CAT5 WIRE AND DO ALL SPLICING. MAKE SPLICE INSIDE BUILDING.
13. PROVIDE SOFFIT VENTS AT EVERY OTHER PANEL, BY STANDING SEAM ROOF MANUFACTURER.
14. FURNISH AND INSTALL SOFFIT PANELS, BY STANDING SEAM MANUFACTURER. EVERY OTHER PANEL SHALL HAVE A VENT.
15. FURNISH AND INSTALL NEW LOUVERED ACCESS DOOR.
16. EXTEND CHIMNEY STACK 24" MIN. ABOVE NEW RIDGE AND 36" MIN. ABOVE ADJACENT FRESH AIR INTAKES.
17. EXTEND GENERATOR EXHAUST PIPE ABOVE NEW ROOF EAVE.
18. EXTEND EXISTING PLUMBING VENTS THROUGH NEW ROOF.
19. EXTEND EXISTING EXHAUST VENTS THROUGH NEW ROOF.
20. FURNISH AND INSTALL AWNING TO PROTECT EXISTING MECHANICAL EQUIPMENT. INCLUDING REQUIRED FOOTINGS, COLUMNS, CONNECTIONS, AND FLASHING TO BUILDING.

0 4' 8' 16'

SCALE:1/8" = 1'

Symb.	Description	Date	App.
A	35% CONCEPT	XX/XX/XX	

Date Approved: 06/XX/13
Rev. ---
Design file no: --
Drawing Code: 65% DESIGN
Dwg scale: AS NOTED

Drawn by: AJM
Date: 06/26/13
Checked by: CWM
Spec No.: 847D1J
Project Superintendent: --
Chief Engineer: LINCOLN BAHR

C. MARTIN COMPANY INC.
ENGINEERING
U.S. ARMY CONTRACTOR
2700 S. 4 STATE ROAD 5414
DUGWAY, UTAH 84022
DEPARTMENT OF THE ARMY
DIRECTORATE OF PUBLIC WORKS
DUGWAY PROVING GROUND

U.S. ARMY DUGWAY PROVING GROUND UTAH
REPLACE ROOF
COMMUNICATIONS BUILDING
MODIFIED ARCHITECTURAL ELEVATIONS

SHEET REFERENCE NUMBER:
A-201
Sheet 4 of 6

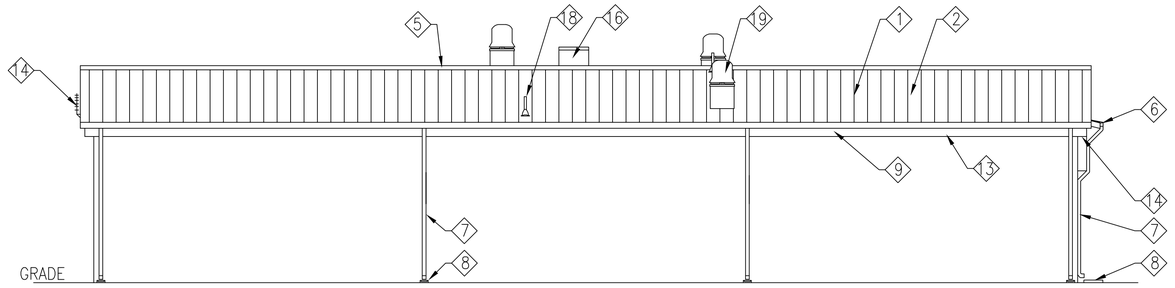

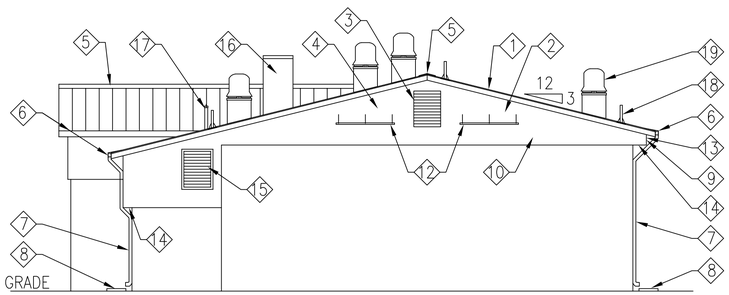

MODIFIED ARCHITECTURAL ELEVATIONS

SCALE: 1/8" = 1'-0"

GENERAL NOTES

1. GENERAL CONTRACTOR SHALL VERIFY ALL DIMENSIONS AND CONDITIONS AT JOB SITE AND BE FULLY RESPONSIBLE FOR SAME.
2. GENERAL CONTRACTOR SHALL VERIFY AND BE RESPONSIBLE FOR EACH AND EVERY EXISTING ROOF PENETRATION EVEN IF IT IS NOT SHOWN ON THE PLANS, AND INSTALL THE NEW ROOF AND FLASH AROUND THE PENETRATIONS AS REQUIRED BY THE STANDING SEAM ROOF MANUFACTURER.
3. GENERAL CONTRACTOR SHALL VISIT THE SITE SO AS TO BE FAMILIAR WITH ALL EXISTING CONDITIONS. BRING ANY QUESTIONS OR CONCERNS TO THE ATTENTION OF THE GOVERNMENT CONTRACTING OFFICER FOR CLARIFICATION, FOR ADDENDUM PRIOR TO BID OPENING. NO ALLOWANCES WILL BE MADE FOR CONDITIONS THAT ARE CLEARLY VISIBLE.
4. ALL SAFETY STANDARDS AND REQUIREMENTS ARE THE RESPONSIBILITY OF THE GENERAL CONTRACTOR.
5. GENERAL CONTRACTOR IS RESPONSIBLE TO KEEP BUILDING WATERTIGHT AT ALL TIMES. STARTING FROM NOTICE TO PROCEED TO SUBSTANTIAL COMPLETION ANY DAMAGE TO THE BUILDING OR ITS CONTENTS SHALL BE THE RESPONSIBILITY OF THE GENERAL CONTRACTOR TO REPAIR.
6. ITEMS DESIGNATED IN KEYNOTES ARE SHOWN IN APPROXIMATE LOCATIONS.
7. ALL DIMENSIONS AND QUANTITIES SHOWN ARE APPROXIMATIONS.
8. EXISTING UTILITY LINES ARE SHOWN IN APPROXIMATE LOCATIONS. EXACT DEPTHS ARE UNKNOWN. CONTRACTOR IS RESPONSIBLE TO REPAIR OR REPLACE ANY MARKED LINES THAT ARE DAMAGED DURING CONSTRUCTION.
9. THE COLOR OF THE NEW STANDING SEAM METAL ROOF SHALL MATCH AS NEAR AS POSSIBLE TERRA COTTA CR, E=.35, BY THE GARLAND CO., OR APPROVED EQUAL UNLESS DIRECTED OTHERWISE BY THE GOVERNMENT.
10. SEE DETAIL H/A-502 FOR PROFILE OF NEW ROOF.

KEY NOTES

1. FURNISH AND INSTALL NEW STANDING SEAM ROOF BY STANDING SEAM ROOF MANUFACTURER.
2. FURNISH AND INSTALL NEW FRAMING BY STANDING SEAM ROOF MANUFACTURER.
3. FURNISH AND INSTALL NEW GABLE END VENT BY STANDING SEAM ROOF MANUFACTURER.
4. FURNISH AND INSTALL NEW GABLE END FACE PANELS BY STANDING SEAM ROOF MANUFACTURER.
5. FURNISH AND INSTALL NEW RIDGE VENT.
6. FURNISH AND INSTALL NEW RAIN GUTTERS. THE EDGE OF THE GUTTER OPPOSITE THE SIDE OF THE ROOF SHALL EXTEND 1" ABOVE THE EAVES. FURNISH AND INSTALL REINFORCEMENT STRAP ON GUTTER TO TOP OF STANDING SEAM ROOF AT EVERY PANEL JOINT, TWO FEET MAXIMUM.
7. FURNISH AND INSTALL NEW DOWN SPOUT, MAX. SPACING BETWEEN DOWN SPOUTS SHALL BE 36'-0".
8. REUSE EXISTING OR FURNISH AND INSTALL NEW PRECAST CONCRETE SPLASH BLOCK, AT EACH DOWN SPOUT, TYP.
9. FURNISH AND INSTALL FASCIA PANELS BY STANDING SEAM ROOF MANUFACTURER.
10. FURNISH AND INSTALL NEW R-49 INSULATION, TO GO ABOVE AND COVER ENTIRE EXISTING ROOF DECK.
11. REINFORCEMENT STRAP FROM RAIN GUTTER TO TOP OF RIB ON STANDING SEAM ROOF AT EVERY RIB.
12. REINSTALL EXISTING ANTENNA AT GABLE END BY EAVE. FURNISH AND INSTALL BRACKET AND REINFORCING AS REQUIRED FOR ANTENNA. FURNISH AND INSTALL NEW JUNCTION BOX, SPLICE, AND CAT5 WIRE AND DO ALL SPLICING. MAKE SPLICE INSIDE BUILDING.
13. PROVIDE SOFFIT VENTS AT EVERY OTHER PANEL, BY STANDING SEAM ROOF MANUFACTURER.
14. FURNISH AND INSTALL SOFFIT PANELS, BY STANDING SEAM MANUFACTURER. EVERY OTHER PANEL SHALL HAVE A VENT.
15. FURNISH AND INSTALL NEW LOUVERED ACCESS DOOR.
16. EXTEND CHIMNEY STACK 24" MIN. ABOVE NEW RIDGE AND 36" MIN. ABOVE ADJACENT FRESH AIR INTAKES.
17. EXTEND GENERATOR EXHAUST PIPE ABOVE NEW ROOF EAVE.
18. EXTEND EXISTING PLUMBING VENTS THROUGH NEW ROOF, TYP.
19. EXTEND EXISTING EXHAUST VENTS THROUGH NEW ROOF, TYP.

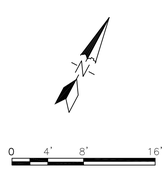

SCALE:1/8" = 1'

Symb.	Description	Date	App.
1	35% CONCEPT	XX/XX/XX	

C. MARTIN COMPANY INC.
ENGINEERING
U.S. ARMY CONTRACTOR
2000 W. 500 N. BLDG. 474
DUGWAY, UTAH 84022
DEPARTMENT OF THE ARMY
DIRECTORATE OF PUBLIC WORKS
DUGWAY PROVING GROUND

Drawn by: AJM	Date: 06/26/13
Checked by: CWM	Spec No.: 8477DJJ
Project Superintendent: --	Design file no: --
Chief Engineer: LINCOLN BAHR	Dwg scale: AS NOTED
	Drawing Code: 65% DESIGN
	Date Approved: 06/XX/13
	Rev. ---

U.S. ARMY DUGWAY PROVING GROUND UTAH
REPLACE ROOF
COMMUNICATIONS BUILDING
MODIFIED ARCHITECTURAL ELEVATIONS

SHEET REFERENCE NUMBER:
A-202
Sheet 5 of 6

GENERAL NOTES

1. CONTRACTOR SHALL VERIFY ALL DIMENSIONS AND CONDITIONS AND BE RESPONSIBLE FOR SAME.
2. CONTRACTOR SHALL VERIFY AND BE RESPONSIBLE FOR ALL ROOF PROTRUSIONS.
3. CONTRACTOR SHALL PROVIDE DETAILS IN THE SHOP DRAWINGS THAT THEY SUBMIT TO THE GOVERNMENT FOR ALL CONDITIONS INCLUDING BUT NOT LIMITED TO THOSE SHOWN ON THIS SHEET. APPROVAL FROM THE GOVERNMENT MUST BE GIVEN TO THE CONTRACTOR BEFORE WORK MAY BE DONE.
4. CONTRACTOR SHALL SUBMIT DETAILS FOR CONSTRUCTION TO THE GOVERNMENT FOR APPROVAL. THESE DETAILS SHALL INCLUDE BUT ARE NOT LIMITED TO THE FOLLOWING: FRAMING; EAVE OF ROOF (AT EXTERIOR WALL); GABLE DETAIL AT TOP OF EXISTING WALL; ROOF RIDGE; ROOF CORNERS; FLASHING, BOOTS, AND SEALS AT ALL ROOF PENETRATIONS; RAIN GUTTERS AND DOWNSPOUTS, AND RESPECTIVE ATTACHMENTS TO ROOF, WALL, AND EACH OTHER; DOWNSPOUT SCREENS; ROOF CRICKETS; LOCATION OF LOW ROOF AWNINGS ABUTTING EXISTING WALL; FASTENING OF PANELS OVER EXISTING FRAMING/ROOFING OF LOW ROOF AWNING, ETC. CONTRACTOR SHALL NOT DO ANY WORK UNTIL APPROVAL FROM THE GOVERNMENT IS GIVEN FOR ALL DETAILS.

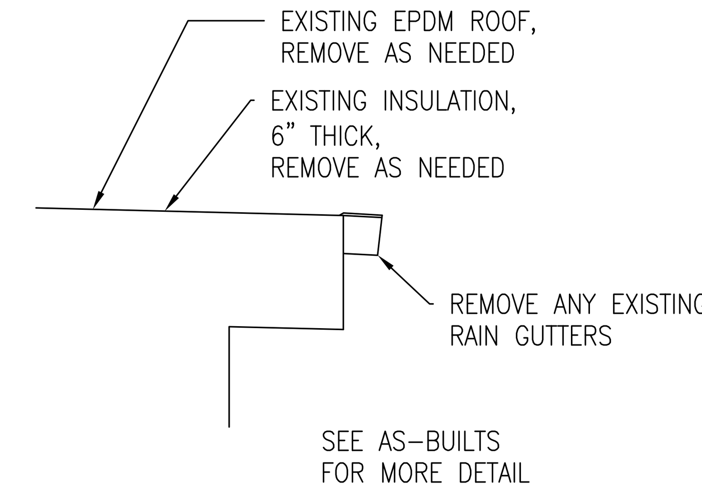

TYPICAL EXISTING EAVE — A
SCALE: 3/4" = 1'-0" — A-101 A-501

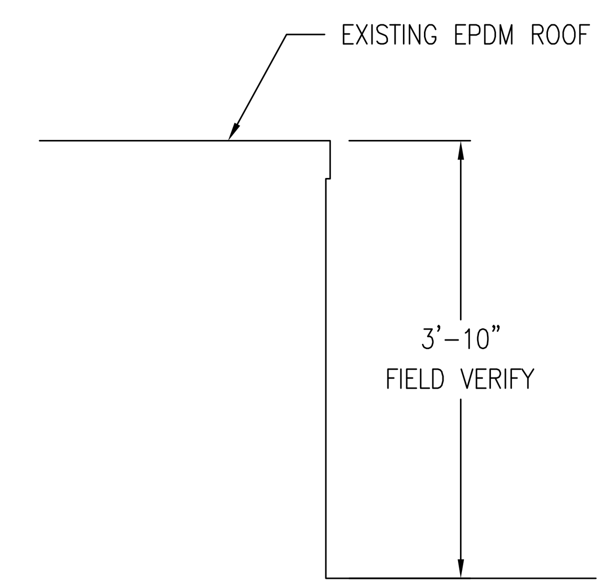

STEP IN EXISTING ROOF — B
SCALE: 3/4" = 1'-0" — A-101 A-501

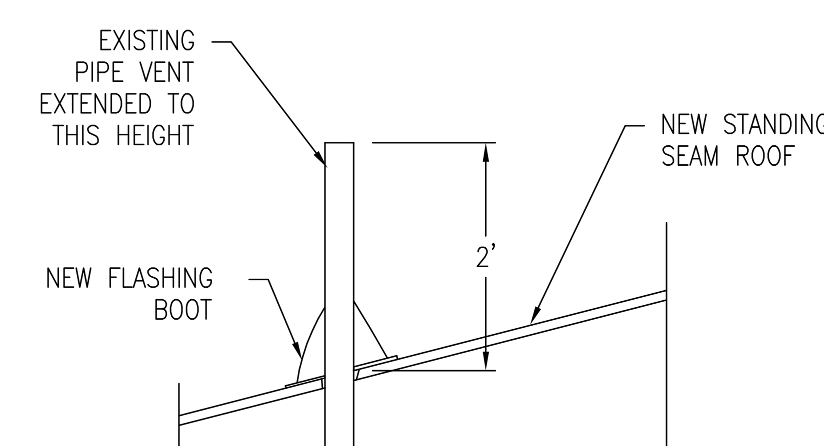

EXISTING PIPE VENT — C
SCALE: 3/4" = 1'-0" — A-101 A-501

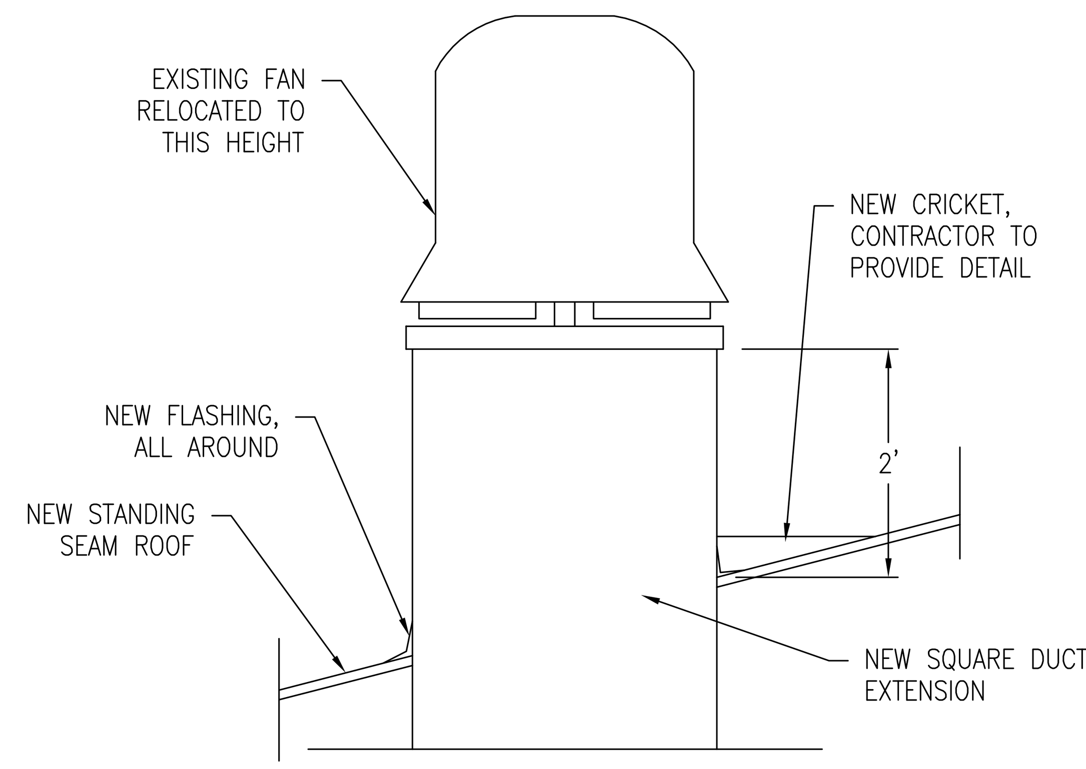

EXISTING FAN — E
SCALE: 3/4" = 1'-0" — A-101 A-501

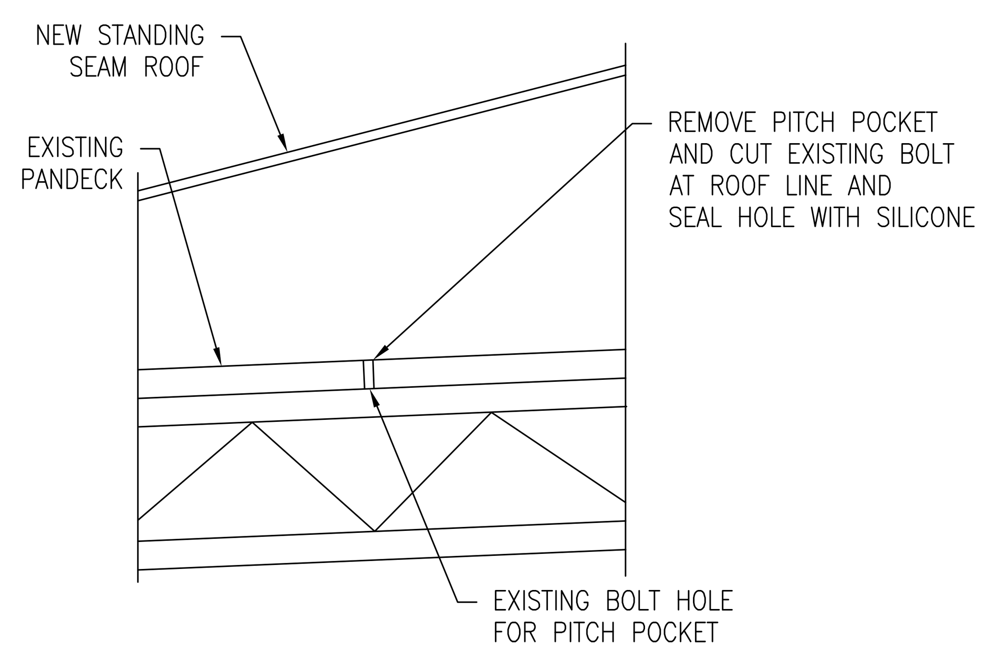

EXISTING SQUARE OPENING — G
SCALE: ########### — A-101 A-501

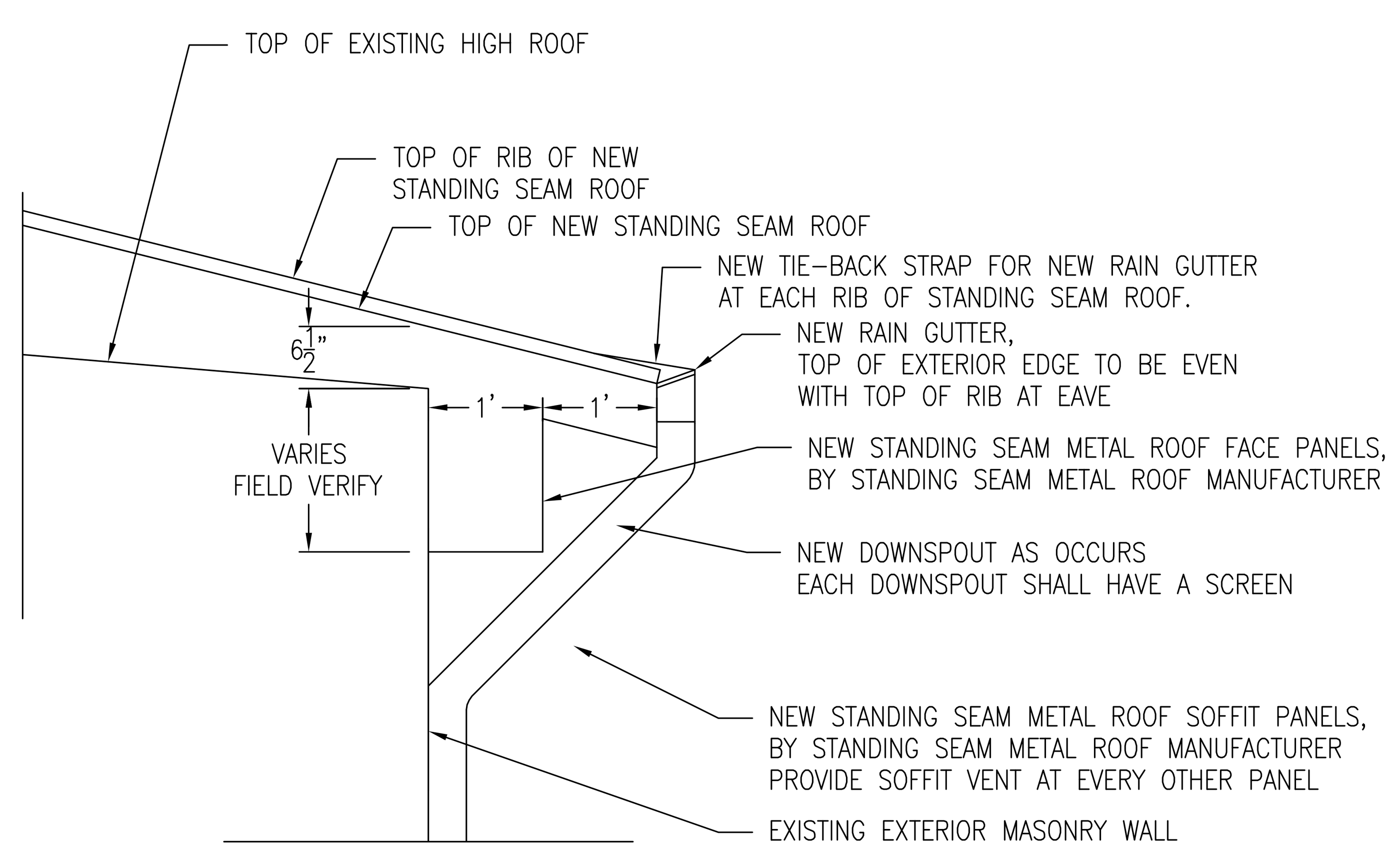

PROFILE OF NEW STANDING SEAM ROOF — H
SCALE: ########### — A-101 A-501

ARCHITECTURAL DETAILS
SCALE: 3/4" = 1'-0"

Symb.	Description	Date	App.
A	35% CONCEPT	XX/XX/XX	

Drawn by: AJM	Date: 06/26/13	Date Approved: 06/XX/13	Rev. ---
Checked by: CWM	Spec No.: 847D1J	Design file no: --	
Project Superintendent: --		Drawing Code: 65% DESIGN	
Chief Engineer: LINCOLN BAHR		Dwg scale: AS NOTED	

C. MARTIN COMPANY INC.
ENGINEERING
U.S. ARMY CONTRACTOR P.O. BOX 478, BLDG. 5474 DUGWAY, UTAH 84022
DEPARTMENT OF THE ARMY DIRECTORATE OF PUBLIC WORKS DUGWAY PROVING GROUND

U.S. ARMY DUGWAY PROVING GROUND UTAH
REPLACE ROOF
COMMUNICATIONS BUILDING
MODIFIED ARCHITECTURAL ELEVATIONS

SHEET REFERENCE NUMBER:
A-501
Sheet 6 of 6