GENERAL STRUCTURAL NOTES

I. Design Criteria

A. Governing Building Code: 1991 Uniform Building Code (UBC)

B. Gravity Live Loading:
1. Roof: ..... 30 psf Snow Load, Snow drift per UBC
2. Mechanical Mezzanine: ..... 160 psf Live Load or actual weights, if larger

C. Earthquake Forces: $V = Z * I * C * W / R_W$:
1. Z, Seismic Zone 3: 0.30
2. I, Importance Factor: 1.00
3. C, Coefficient: 2.75
4. R_W Building Type: ..... 6.0 Bearing Wall -- Masonry Shear Walls
5. W = Weight of Structure

D. Wind:
1. Velocity: ..... 70 miles per hour
2. Exposure Type: C
3. Importance Factor ..... 1.0, Standard Occupancy

E. Foundation:
1. Subsurface Conditions:
Soils report and log of borings was obtained by the Owner for the Engineer's use in the design of the foundation, and is not a part of the Contract Documents. This report and log of borings is available for the Contractor's information, but is not a warranty of the subsurface conditions. The Contractor may use the report at his own risk.
2. Soils Report by R.B. & G Engineering, Inc. dated March 1994.
3. Soil Bearing Pressure: 1300 psf
4. Lateral Soil Pressure Fluid Equivalent Density.
a. Active: ..... 35 pcf (retaining walls)
b. At Rest: ..... 55 pcf (rigid foundation walls)
c. Passive: ..... 300 pcf

II. Earthwork:

A. See specifications, drawings and details for earthwork requirements.

III. Concrete

A. Materials shall comply with the Standards specified in the latest edition of ACI 318, "Building Code Requirements for Reinforced Concrete".
1. Compressive strengths of concrete at 28 days shall be as follows:
a. Footings ..... 3000 psi
b. Slabs on Grade ..... 4000 psi
c. Foundation Walls ..... 3000 psi
d. Beams and Suspended Slabs ..... 4000 psi
e. Concrete over Steel Deck ..... 3000 psi
f. All other Site Cast Concrete ..... 4000 psi
2. Concrete Density:
a. Normal weight concrete shall be approximately 145 to 155 pounds per cubic foot.
3. Reinforcement steel: Grade 60, f_y = 60,000 psi min. unless noted otherwise.
4. Admixtures:
a. Air-entraining admixtures, comply with ASTM C 260 (when used).
b. Calcium chloride shall not be added to the concrete mix.
5. Only one grade or type of concrete shall be poured on the site at any given time.

B. Formwork shall comply with ACI Standards Publication 347 and the project specifications. The contractor shall be responsible for the design, detailing, care, placement and removal of the formwork and shores.

C. Concrete cover requirements for deformed bar reinforcing steel shall comply with ACI 318, "Building Code Requirements for Reinforced Concrete".

	Clear. Cover
1. Cast-in-place Concrete:	
a. Cast against and permanently exposed to earth	3"
b. Formed concrete exposed to earth or weather:	
#6 thru #18 bars	2"
#5 and smaller bars	1 1/2"
c. Concrete not exposed to weather or in contact with ground:	
Slabs, Walls, Joists; #11 bars and smaller	3/4"
Beams, Columns: Primary Reinf., Ties, Stirrups, Spirals	1 1/2"

D. Construction Joints and Control Joints:
1. Provide a continuous 2 X 4 keyway in all wall footings, unless noted otherwise. See details.
2. All horizontal and vertical construction joints shall have a continuous 2 X 4 keyway along the joint, unless noted otherwise. See details. In addition, all joints shall be intentionally roughened to a full amplitude of approximately 1/4".
3. Provide reinforcing dowels to match the member reinforcing at the joint, unless noted otherwise.
4. Slabs on grade shall have construction or control joints spaced not to exceed 30 times the slab thickness in any direction. All discontinuous control or construction joints shall be reinforced with 2 - #4 x 48." See structural details. Construction joints shall not exceed a distance of 125'-0" o.c. in any direction.
5. Control joints shall be installed in slabs on grade so the length to width ratio of the slab is no more than 1.25:1. Control joints shall be completed within 12 hours of concrete placement. Control joints may be installed by:
a. Saw cut a depth of 1/4 the thickness of the slab
b. Tooled joints a depth of 1/4 the thickness of the slab

E. Detailing: All reinforcing, including WWF, shall be detailed, bolstered & supported to comply with ACI 315, "Manual of Standard Practice for Detailing Reinforcing Concrete Structures" and the Concrete Reinforcing Steel Institute (CRSI) recommendations. Reinforcing bars shall not be welded unless specifically shown on drawings.
1. Lap splice lengths shall be as follows:
a. 30 bar dia. for #3 and #4 bars.
b. 40 bar dia. for #5 thru #8 bars.
c. Do not splice stirrups & ties.
d. Do not splice vertical bars in retaining walls, unless specifically shown.
2. All embedments and dowels shall be securely tied to formwork or to adjacent reinforcing prior to the placement of concrete.
3. Use chairs or other support devices recommended by the CRSI to support and tie reinforcement bars and WWF prior to placing concrete. WWF shall be continuously supported at 36" o.c. maximum.
4. Provide corner bars at intersecting wall corners using the same bar size and spacing as the horizontal wall reinforcing. Unless noted otherwise, corner bar lap lengths shall conform with reinforcing bar lap splice lengths as noted above.
5. All vertical reinforcing shall be doweled to footings, or to the structure below. Dowels shall be the same size and at the same spacing as the vertical reinforcing scheduled (or detailed) for the element above. Lap splice lengths shall comply as noted above or as shown in the drawings. Dowels extending into footings shall terminate with a 90° standard ACI hook and shall extend to within 4" of the bottom of the footing. Footing dowels (#8 bars and smaller) with hooks need not extend more than 20" into footings.
6. Horizontal wall reinforcing shall terminate at ends of walls and openings into the far end of the jamb column with a 90 degree hook plus a 6 bar diameter extension, unless shown otherwise. Lap horizontal bar splices as noted above or as shown in the drawings. Horizontal wall reinforcing shall be continuous through construction and control joints. Splices in horizontal reinforcement shall be staggered, so the splice laps will not overlap. Splices in two curtains where used shall not occur in the same location, splice laps shall not overlap.
7. Wall Openings: Place 2- #5 bars around all openings 8" or larger in any direction, and extend the reinforcing bars a minimum of 24" beyond the corner of the openings, unless noted otherwise. Where 24" is not available, extend bars as far beyond the opening as possible and terminate them with a 90° standard ACI hook. Contact Engineer for reinforcement of wall openings 36" wide and wider:
9. Provide 2-#5 X 4'-0" diagonal bars at the corners of all openings. Diagonal bars shall be centered on the corner of the opening. All recesses in concrete walls that interrupt reinforcing steel shall be reinforced the same as an opening.

F. Minimum Reinforcing: Wall reinforcing shall be as follows, unless noted otherwise:

WALL THICKNESS	HORIZONTAL REINF.	VERTICAL REINF.
6"	#4 @ 13" O.C.	#4 @ 18" O.C.
8"	#5 @ 15" O.C.	#4 @ 16" O.C.
10"	#5 @ 12" O.C.	#4 @ 13" O.C.
12"	#4 @ 13" O.C. Each. Face	#4 @ 18" O.C. Each. Face
Others	0.25% of Wall Area	0.15% of Wall Area

IV. Masonry

A. Materials, unless noted otherwise:
1. Concrete Masonry Units: Lightweight Grade N, Type 1 (minimum unit strength of 1900 psi) or better. ($f'm$ = 1500 psi)
2. Mortar: Use Type "S" according to Section 2603(c) of the Uniform Building Code, and tested every 5,000 square feet according to UBC Standards, No's 24-20 and 24-22. Admixtures shall not be added to the mortar mix. (1500 psi minimum compressive strength for field specimens) Material testing shall be contracted by the owner.
3. Grout: shall be proportioned according to UBC section 2403(d) and tested every 5,000 square feet according to UBC Standards No's. 24-28 and 24-29, and shall attain a minimum compressive strength of 2000 psi at 28 days. Testing shall be contracted by the owner.
4. Reinforcing: Grade 60 reinforcing steel shall comply with ASTM A615. Wire joint reinforcing shall comply with UBC Standard No. 24-15.
5. Deformed Bar Anchors (DBA): All DBAs shall comply with ASTM A496.
6. Anchor Bolts (AB): ASTM A307 with ASTM A563 heavy hex nuts and hardened washers, Grade A, unless noted otherwise.
7. Headed Stud Anchors (HSA): Manufacture all HSAs in conformance with ASTM A-108 with dimensions complying with AISC specifications.

B. Construction Requirements:
1. Mortar Joints: Joints shall be "concave", "V-joint" or "weathered raked" for structural members unless noted otherwise on architectural drawings.
2. Masonry walls, beams and columns shall be constructed with running bond, unless noted otherwise.
3. Grouting Requirements: Comply with UBC Section 2404. Grout shall be mechanically consolidated and mechanically reconsolidated according to UBC section 2404(f)2.
4. Reinforcing Bars shall not be welded unless specifically shown on drawings. In such cases, use only AWS standards. Do not substitute reinforcing bars for DBAs or HSAs.
5. Control Joints: Spacing shall not exceed 40'-0". See architectural drawings for locations.
6. Grout all beam and joist pockets solid after installation of beams and joists.

C. Detailing Requirements:
1. Standards: Reinforcing detailing shall comply with American Concrete Institute (ACI) Standard 315, "Manual of Standard Practice for Detailing Reinforcing Concrete Structures".
2. Reinforcement Protection (cover):
a. Joint reinforcement shall have not less than 5/8" mortar coverage from the exposed face.
b. Other reinforcement shall have a minimum coverage of one bar diameter over all the bars, but not less than 3/4". When masonry is exposed to weather or soil, minimum coverage shall be 2".
3. Vertical steel reinforcement shall be placed and secured against displacement prior to grouting by wire positioners or other suitable devices at intervals not exceeding 200 bar diameters or 10 feet maximum, or at bar splice locations.
4. Lap Splice Lengths: Lap all masonry reinforcing a minimum of 48 bar diameters with a minimum lap of 24". Joint reinforcement shall lap a minimum of 6".
5. Corner Bars: Horizontal reinforcement shall be continuous at all corners and intersecting walls. Provide 2-#5 vertical miniumum in grouted cell at all corners and wall intersections. Provide corner bars with the required lap splice length.
6. Dowels: All vertical reinforcing shall be doweled to the foundation wall, footing (structure below) and to the structure above with the same size dowel, spacing (and in the same core) as the vertical wall reinforcing unless noted otherwise.
7. Wall Openings 24" wide and wider: Provide reinforced masonry lintels per Masonry Lintel Schedule over the top of, and 2-#5 bars, in grouted spaces, on all sides and adjacent to every unscheduled opening, unless noted otherwise. Bars for all openings shall extend a minimum of 48 bar diameters beyond the corners of the opening. Vertical bars shall extend from floor level below to the floor or roof level above. Where a 48 bar diameter extension is not possible, extend bars as far beyond the opening as possible and terminate them with a 90° standard ACI hook.
8. Horizontal wall reinforcing shall be continuous through joining concrete walls, masonry walls, columns, and pilasters. Provide a key between the wall and the column or pilaster. Horizontal wall reinforcing shall be placed inside the column vertical reinforcing.
9. Anchor bolts and headed stud anchors shall be set in a grouted cell. Anchor bolts and headed stud anchors shall have 1" grout surrounding the shank at its penetration. Grout shall be flush with the face or top of the masonry.
10. All masonry column ties shall terminate with 135° hooks plus a 6 bar diameter extension (4" minimum).
11. The exposed face of all embed plates shall be set flush with the face of masonry wall or column.

D. Minimum Reinforcing:
All masonry walls shall be reinforced as follows, unless shown otherwise on the drawings. Reinforcing shall be placed in grouted cells.

6" C.M.U. walls ..... #5 Vertical at 32" o.c.
1- #4 Horizontal at 48" o.c.
8" C.M.U. walls ..... #5 Vertical at 32" o.c.
1- #5 Horizontal at 48" o.c.
10" C.M.U. walls ..... #6 Vertical at 32" o.c.
1- #6 Horizontal at 48" o.c.
12" C.M.U. walls ..... #6 Vertical at 32" o.c.
2- #5 Horizontal at 48" o.c.

E. Masonry Strength Verification:
1. Masonry strength, f'm shall be verified using the "Unit Strength Method" per UBC Section 2405(c)3 and as described below:
a. Prior to construction, a letter of strength certification from the suppliers of the masonry units and grout shall be submitted.
b. For walls which require special inspection, prior to construction the masonry units shall be tested for strength and a letter of certification for the grout strength shall be provided.
c. For walls which require special inspection, during construction the masonry units and grout shall be tested for every 5,000 square feet of masonry constructed.
2. The contractor has the option of using the "Masonry Prism Testing Method" or "Masonry Prism Test Record Method" per UBC Section 2405(c)1 and 2405(c)2 in lieu of the "Unit Strength Method."

V. Structural Steel

A. Material:
1. Shapes and Plates: ASTM A-36 except as noted otherwise.
2. Tubes: ASTM A500, Grade B (F_y = 46,000 psi)
3. Pipe Columns: ASTM A53, Types E or S, Grade B.
4. Deformed Bar Anchors (DBA): All DBAs shall comply with ASTM A496.
5. Headed Stud Anchors (HSA): Manufacture all HSAs in conformance with ASTM A-108 with dimensions complying with AISC specifications.
6. Anchor Bolts (AB): ASTM A307 with ASTM A563 heavy hex nuts and hardened washers, Grade A, unless noted otherwise.

B. Fabrication and construction shall comply with the latest edition of the following Codes and Standards:
1. American Institute of Steel Construction (AISC), "Specification for the Design, Fabrication and Erection of Structural Steel for Buildings," with "Commentary".
2. AISC "Code of Standard Practice" excluding the following: Section 1.5.1, Section 3.3 (first sentence), Section 4.2, Section 4.2.1, Section 4.2.2, Section 7.5.4, and Section 7.11.5.
3. AISC "Specification for Structural Joints Using ASTM A325 or A490 Bolts"
4. Steel Joist Institute (SJI), "Standard Specifications and Code of Standard Practice".
5. American Welding Society (AWS), Structural Welding Code (specific items do not apply when they conflict with the AISC requirements).
6. American Iron and Steel Institute (AISI), "Specification for the Design of Cold-Formed Steel Structural Members".

C. Structural shapes and plates shall be fabricated from newly rolled (milled) one piece sections without splices, unless specifically noted otherwise on the structural drawings. Connections for structural steel shall comply with the structural drawings, unless written approval is given by the structural engineer.

D. Welding:
1. Certification of Welders: All shop and field welding shall be executed by AWS certified welders. Certification shall be considered current if dated within the past 12 months. Welders will be considered certified if they have been certified by AWS and their work records are current within every six month period thereafter as required by AWS. Certification and records must comply with AWS Standards. Certification and appropriate records must be provided to the architect prior to beginning work.
2. Electrodes: E-70 XX or as noted otherwise. E60 XX may be used for welding steel floor and roof decks.
3. Minimum Welds: All intersecting steel shapes which are not bolted shall be connected by a fillet weld all around, unless noted otherwise. Fillet weld sizes that are not shown shall be 1/16" less than the thinnest of the connected parts for thicknesses 1/4" and larger. Fillet welds on plates less than 1/4" shall be of the same size as the thinnest of the connected part.
4. Reinforcing Bars: Do not weld rebar except as specifically detailed in the drawings. In such cases, use only AWS standards. Do not substitute reinforcing bars for deformed bar anchors (DBAs), machine bolts, or headed stud anchors(HSAs).
5. Quality Assurance: The owner may test all welds by means of x-ray, ultra-sonic or any other appropriate non-destructive procedure. Deficient welds shall be corrected and tested at no additional cost to the owner. Testing shall comply with UBC Standard No. 27-6.
6. A copy of all weld testing reports shall be provided to the structural engineer.
7. It is recommended the steel erection contractor and steel fabricator contact the approved testing lab of the owner's choice prior to beginning any of the above welds. A program of joint preparation and welding procedures should be worked out between the two parties before the welding is started so that correct welds will be made from the beginning.
8. Headed Stud Anchors (HSAs) welding and deformed bar anchor welding shall conform to the manufacturer's specifications. Welding shall be tested to comply with AWS D1.1 Section 7.8 through 7.8 and Appendix K.

E. Bolted Connections:
1. Use ASTM A325N bolts for steel to steel connections, unless noted otherwise. Tighten bolts by the turn of the nut, calibrated wrench, or direct tension indicator method. Alternate fastener designs as defined by AISC shall be submitted to the engineer for review and acceptability prior to installation. Provide hardened washers beneath turned element. Bolts shall be tested as required by UBC Section 306.
2. Provide hardened washers beneath the turned element of all bolts or nuts. Provide hardened beveled washers, to compensate for the lack of parallelism, where the outer face of the bolted parts has a slope greater than one in twenty with respect to the plane normal to the bolt axis. Hardened washers or plates installed over oversized holes or slotted holes shall be at least 5/16" thickness and shall conform to ASTM F436. Plates or bars installed at slotted holes shall have a size sufficient to completely cover the slot after installation.
3. Where a steel to steel beam connection is not detailed in the drawings, provide a standard AISC framed connection with the capacity to support one half of the total uniform load capacity of the given shape for the span and for the steel specified.
4. Bolts, nuts and washers shall not be reused.

F. Beam Web Stiffener Plates:
Provide full height web stiffener plates to each side of all beams above all bearing points. Stiffener plates shall be the thickness noted below unless noted otherwise and shall be welded on both sides of the stiffener plate with fillet welds (noted below) all around.

Beam Web stiffener thickness	For beams with flange widths between	Weld Size
1/4 inch thick	Greater than 0" and less than 8 1/4"	3/16"
3/8 inch thick	Greater than 8 1/4" and less than 12 1/4"	1/4"
1/2 inch thick	Greater than 12 1/4" and less than 16 1/2"	5/16"
5/8 inch thick	Greater than 16 1/2" and less than 20 3/4"	3/8"

G. Open Web Steel Joists and Girders:
1. The steel joist supplier shall be responsible for the design of all parallel chord and double pitched top chord steel joists and girders. Joists or girders with slopes greater than 1/2 inch per foot shall be designed to meet or exceed the load capacities, listed in the SJI load tables, of the joist or girder sizes indicated on the framing plan, as if the joists or girders were installed level.
2. Provide special bearing ends to accommodate slopes from sloped joists, sloped girders or sloped bearing conditions.
3. Camber: All joists shall be cambered as specified in the SJI specifications, unless noted otherwise.
4. Field Modifications: Do not modify any joist or girder, including holes through the top and bottom chords, without the written consent and direction from the manufacturer.
5. Shop Drawings and Design Calculations: Shop drawings for all joists and girders used in the project shall be submitted for review. Prior to the fabrication of joists and girders, the open web steel joist and girder manufacturer shall prepare complete joist and girder calculations under the direct supervision of a professional engineer licensed in the State of Utah.

H. Steel Floor Deck:
1. Steel floor deck shall comply with the latest requirements of the Steel Deck Institute, SDI. Submit ICBO report with load and lateral shear capacities with shop drawings.
2. Steel floor deck shall be 2" deep X 22 gauge minimum galvanized (G60) composite, type "W" deck with interlocking side seams with the following properties:

	22 Gauge	20 Gauge	18 Gauge
Minimum S (in^3/ft) =	0.283*	0.361	0.461
Minimum I (in^4/ft) =	0.340	0.423	0.555

Yield stress of the 22 gauge steel deck shall be limited to a maximum of 50 ksi.
3. A 3 1/2" thick (5 1/2" overall) concrete (f'c = 3,000 psi @ 28 days unless noted otherwise) slab shall be poured over the steel deck. Reinforce slab with 6" x 6" - W2.1/W2.1 welded wire fabric minimum, unless noted otherwise. Welded Wire Fabric shall be placed 1" to 1 1/2" below the top of the slab
4. Steel deck with 3 1/2" thick (5 1/2" overall) normal weight concrete slab shall have a minimum diaphragm shear capacity of 2490 lbs/ft. for a 7'-0" deck span.
5. Weld deck to supporting framing members with 3/4" diameter puddle welds at the following spacing (Closer spacings may be used to develop minimum shear requirements.):
a. 12" o.c. to supports perpendicular to deck corrugations (4 welds per 36" wide sheet).
b. 12" o.c. to all supports parallel to deck corrugations.
c. All welded surfaces shall be dry before welding deck or studs to supports.
6. Attach interlocking seams with 3/16" Ø button punch at 18" o.c. or 1 1/2" top seam weld at 36" o.c. between adjacent pieces of deck. Crimp seams before button punching or welding interlocking seams. Closer spacings may be used to develop minimum shear requirements.
7. Where possible, all deck shall be 3-span continuous minimum. In areas where 3-span conditions are not possible, the deck shall meet the above loading criteria for the span condition The contractor shall provide heavier gauge deck as required for one or two span conditions to meet the equivalent loading of the above deck under a three span condition.
8. Deck shall have a minimum bearing length of 2".

I. Steel Roof Deck:
1. Steel roof deck shall comply with the latest requirements of the Steel Deck Institute, SDI. Submit ICBO report with load and lateral shear capacities with shop drawings.
2. Steel roof deck shall be 1.1/2" deep-X 20 Gauge minimum galvanized (G-60), type "B" wide rib deck with interlocking side seams with the following properties:

	20 Gauge	18 Gauge
Minimum S (in^3/ft) =	0.234	0.322
Minimum I (in^4/ft) =	0.213	0.296

3. Minimum allowable deck diaphragm shear values shall be 840 lb/ft. for a 7'-0" deck span.
4. Weld steel roof deck to supporting framing members with 3/4" diameter puddle welds at the following spacings (Closer spacings may be used to develop minimum shear requirements.):
a. 6" o.c. to all supports perpendicular to deck corrugations (7 welds per 36" sheet).
b. 6" o.c. to all supports parallel to deck corrugations.
c. All welded surfaces shall be dry before welding deck to supports.
5. Attach interlocking seams with 1 1/2" long top seam welds at 12" o.c. minimum between adjacent pieces of decking. Crimp side seams before welding. Closer spacings may be used to develop minimum shear requirements.
6. Provide a 2" minimum bearing and a 4-inch lap at the splice points of all pieces of deck.
7. Steel roof deck shall not be used to support loads from plumbing, HVAC ducts, light fixtures, architectural elements or equipment of any kind, unless specifically noted.
8. Where possible, all deck shall be 3-span continuous minimum where possible. The contractor shall provide heavier gauge deck as required for one or two span conditions to meet equivalent loading of the above deck under a three span condition.

J. Cold-Formed Steel
1. Light Gauge Steel Framing:
a. All load bearing stud (and/or) joist framing members along with all runner, bridging, and end track shall be of the type, size and gauge as shown on the plans. All 14 and 16 gauge steel studs, and 12, 14, and 16 gauge joists shall be formed from steel meeting the requirements of ASTM A570 except that the steel shall have a 50,000 psi yield stress. All 14 and 16 gauge track and end closure, 16 gauge bridging, and 18 and 20 gauge studs and track shall be formed from steel with a minimum yield of 33,000 psi. All components shall be galvanized.
b. Follow all manufacturer's recommendations for the use of these products.
c. Unless noted otherwise, all welded connections shall be done using 1/8" AWS type 6013 or 7014 rod with a welding heat of 60-110 amperes depending on the gauge of material and the fit of the parts. Wire tying of framing components shall not be permitted.
d. All interior non-bearing steel stud walls which extend above the ceiling but do not attach to the floor or roof diaphragm (above), shall have diagonal braces (45°). The KL/r ratio of the brace shall not exceed 200 and shall not be spaced further apart than 10'-0". Connect diagonal braces to the top of the steel stud walls and to the top flange of the steel beams with 1/8" fillet welds all around. Diagonal angle braces may be connected to 8" x 8" x 1/4" steel plates which shall be anchored to the floor or roof deck with 2- 3/8" dia. expansion anchors for each plate. Connect angle to plate with a 1/4" fillet weld all around.

VII. Special Instruction

A. The project specifications are not superseded by the General Structural Notes but are intended to be complementary to them. Consult the specifications for additional requirements in each section. Notes and details on the drawings shall take precedence over General Structural Notes and typical details.

B. All omissions or conflicts between the various elements of the working drawings and/or specifications shall be brought to the attention of the Architect and Structural Engineer before proceeding with any work involved. In case of conflict, follow the most stringent requirement as directed by the Architect without additional cost to the owner.

C. Notification of Engineer: The Engineer shall be notified twenty-four hours prior to:
1. Placing concrete in any footing.
2. Closing any wall forms.
3. Placing concrete in any column, beam or suspended slab.
4. Grouting any masonry.
5. Completing the welding of major sections of steel decking.

D. Shoring and Bracing Requirements:
1. Floor and Roof Structures -- The General Contractor is responsible for the method and sequence of all structural erection. He shall provide temporary shoring and bracing as his method of erection requires to provide adequate vertical and lateral support. Shoring and bracing shall remain in place as the chosen method requires until all permanent members are in place and all final connections are completed, including all roof and floor attachments. The building shall not be considered stable until all connections are complete.
2. Foundation walls must be braced until the complete floor or roof systems is completed. Do not backfill until floor or roof systems are in place.
3. Walls above grade shall be braced until the structural system is complete. Walls shall not be considered to be self supporting.

E. Submittals: A copy of all shop drawings that have been submitted for review must be kept at the construction site for reference. These drawings must bear the appropriate review stamps. The shop drawing review shall not relieve the contractor of the responsibility of completing the project according to the contract documents. The general contractor shall review and mark all shop drawings prior to submitting them to the Architect for his review. Shop Drawings made from reproductions of (these) contract drawings will be rejected.

F. Project Coordination: It shall be the responsibility of the general contractor to coordinate with all trades any and all items that are to be integrated into the structural system. Openings or penetrations through, or attachments to the structural system that are not indicated on these drawings shall be the responsibility of the general contractor and shall be coordinated with the Architect/Engineers. The order of construction is the responsibility of the general contractor. It is the contractor's obligation to provide all items necessary for his chosen procedure.

G. Observation visits to the site by the Engineer's field representatives shall not be construed as inspection or approval of construction.

H. Contractor shall field verify all dimensions, and conditions. If the contract drawings do not represent actual conditions, contractor shall notify architect/engineer prior to fabrication or construction within that area.

I. Notice of Copyright: The structural drawings, plans, schedules, notes and details are hereby copyrighted by Reaveley Engineers and Associates, Inc., All Rights reserved. Submission or distribution of documents to meet official regulatory requirements or for similar purposes in connection with the project is not to be construed as publication in derogation of Reaveley Engineers & Associates, Inc.'s reserved rights. The documents defining the structure are instruments of service prepared by Reaveley Engineers and Associates, Inc. for one use only. Furthermore, these documents shall not be reproduced, or copied, in whole or in part by the contractor or his subcontractors for preparation of shop drawings or other submittals.

VIII. Special Inspections:

Special inspection shall be provided by the owner according to UBC section 306. The special inspector shall observe the work for conformance with the contract documents. The special inspector shall send reports to the owner, the building official, the architect, the engineer and to the contractor. All discrepancies shall be brought to the attention of the contractor for correction. The special inspector shall submit a final signed report stating that the special inspection work was, to the best of his knowledge, in conformance with the plans, specifications and applicable workmanship provisions of the UBC. Special inspection is required for the following work:
1. Concrete placement
2. Bolts installed in concrete
3. Structural welding, including steel deck.
4. High Strength bolted connections
5. Structural masonry as required by the contract documents, See Masonry section of the General Structural Notes and Masonry Schedules for additional information.
a. Design stresses have been adjusted to permit non-continuous inspection of masonry.

ABBREVIATIONS AND PLAN MARKS

AB	ANCHOR BOLT (S)	DBA	DEFORMED BAR ANCHORS
ABV	ABOVE	DBL	DOUBLE
@	AT	DET	DETAIL
ALT	ALTERNATE	DIA. or Ø	DIAMETER
APPROX	APPROXIMATE	DIM	DIMENSION
ARCH	ARCHITECT (URAL)	DN	DOWN
		DWG	DRAWING
B or BM	BEAM	DWL	DOWEL
BEL	BELOW		
BF-#	BRACED FRAME	EA.	EACH
BRG	BEARING	E.J.	EXPANSION JOINT
BTWN	BETWEEN	ELEV	ELEVATION
BLDG	BUILDING	ELEC.	ELECTRICAL
BOT	BOTTOM	EQUIP.	EQUIPMENT
BP-#	STEEL BASE PLATE	EQ.	EQUAL
		EXIST	EXISTING
CB-#	CONCRETE BEAM	EXP	EXPANSION/EXPOSED
CC-#	CONCRETE COLUMN	EXT	EXTERIOR
CDP-#	CONCRETE DRILLED PIERS	E.F.	EACH FACE
CFW-#	CONCRETE FOUNDATION WALL	F-#	FOOTING
CGB-#	CONCRETE GRADE BEAM	FTG	FOOTING
C.J.	CONSTRUCTION JOINT OR CONTRACTION JOINT	F.D.	FLOOR DRAIN
		FDTN	FOUNDATION
CJ-#	CONCRETE JOIST	F.FL.	FINISH FLOOR
CL-#	CONCRETE LINTEL	FIN	FINISH
CMU	CONCRETE MASONRY UNIT	FL/FLR	FLOOR
COL	COLUMN	FT	FOOT
CONC	CONCRETE		
CONST	CONSTRUCTION	GA	GAUGE
CONT	CONTINUOUS	GALV	GALVANIZED
CONTR	CONTROL	GR	GRADE
CP-#	CONCRETE PIER	GSN	GENERAL STRUCTURAL NOTES
CP-#	STEEL CAP PLATE		
CRW-#	CONCRETE RETAINING WALL	H.B.	HORIZONTAL BRIDGING
CSS-#	CONCRETE SUSPENDED SLAB	HGT	HEIGHT
		HORIZ	HORIZONTAL
CTR	CENTER	HSA	HEADED STUD ANCHORS
CSW-#	CONCRETE SHEAR WALL CONCRETE WALL	IN.	INCH

INSUL.	INSULATION	REQD	REQUIRED
INT.	INTERIOR		
I.F.	INSIDE FACE	SC-#	STEEL COLUMN
		SCH.	SCHEDULE
JT.	JOINT	SHT	SHEET
JST	JOIST	STD	STANDARD
		STIFF	STIFFENER
KLF	KIPS PER LINEAL FOOT	STL/ST	STEEL
KSF	KIPS PER SQUARE FOOT	SQ	SQUARE
K/KIP	1,000 POUNDS	SIM	SIMILAR
		STRUCT	STRUCTURAL
L.F.	LINEAL FOOT	STAG	STAGGERED
LBS	POUNDS		
		T&B	TOP AND BOTTOM
MAS.	MASONRY	TEMP	TEMPERATURE
MAX	MAXIMUM	THDS	THREADS
MC-#	MASONRY COLUMN	T.O.	TOP OF (ELEVATION)
MECH.	MECHANICAL	T.O.C.	TOP OF CONCRETE
MF-#	MAT FOOTING	T.O.F.	TOP OF FOOTING
MF-#	MOMENT FRAME	T.O.S.	TOP OF SLAB
MFR.	MANUFACTURER	T.O.W.	TOP OF WALL
MIN.	MINIMUM	TYP	TYPICAL
MISC.	MISCELLANEOUS		
ML-#	MASONRY LINTEL	UBC	UNIFORM BUILDING CODE
MW-#	MASONRY WALL	U.N.O.	UNLESS NOTED OTHERWISE
N.I.C.	NOT IN CONTRACT	VERT	VERTICAL
N.T.S.	NOT TO SCALE		
		W/	WITH
OPNG.	OPENING	W.W.F.	WELDED WIRE FABRIC
OPP.	OPPOSITE HAND		
O.C.	ON CENTER		
O.F.	OUTSIDE FACE		
PCF	POUNDS PER CUBIC FOOT		
PD-#	PLYWOOD DIAPHRAGM		
PL	PLATE		
PNL	PANEL		
PSF	POUNDS PER SQUARE FOOT		
PSI	POUNDS PER SQUARE INCH		
PSW-#	PLYWOOD SHEAR WOOD		
PT	POINT		
REINF.	REINFORCING		
R.D.	ROOF DRAIN		

REVISIONS

NO.	DATE	EXPLANATION	DRAWN	CHECKED
			DRAWN BY: C.E.B.	CHECKED BY: S.L.K.

THE NEW
ALICE C. HARRIS
INTERMEDIATE SCHOOL
LOCATED IN
TREMONTON, UTAH 84337

NAYLOR WENTWORTH ARCHITECTS
A PROFESSIONAL CORPORATION
175 West 200 South
Suite 4100
Salt Lake City, Utah 84101
Tel 801 355-5960
Fax 801 355-5960

S1.1

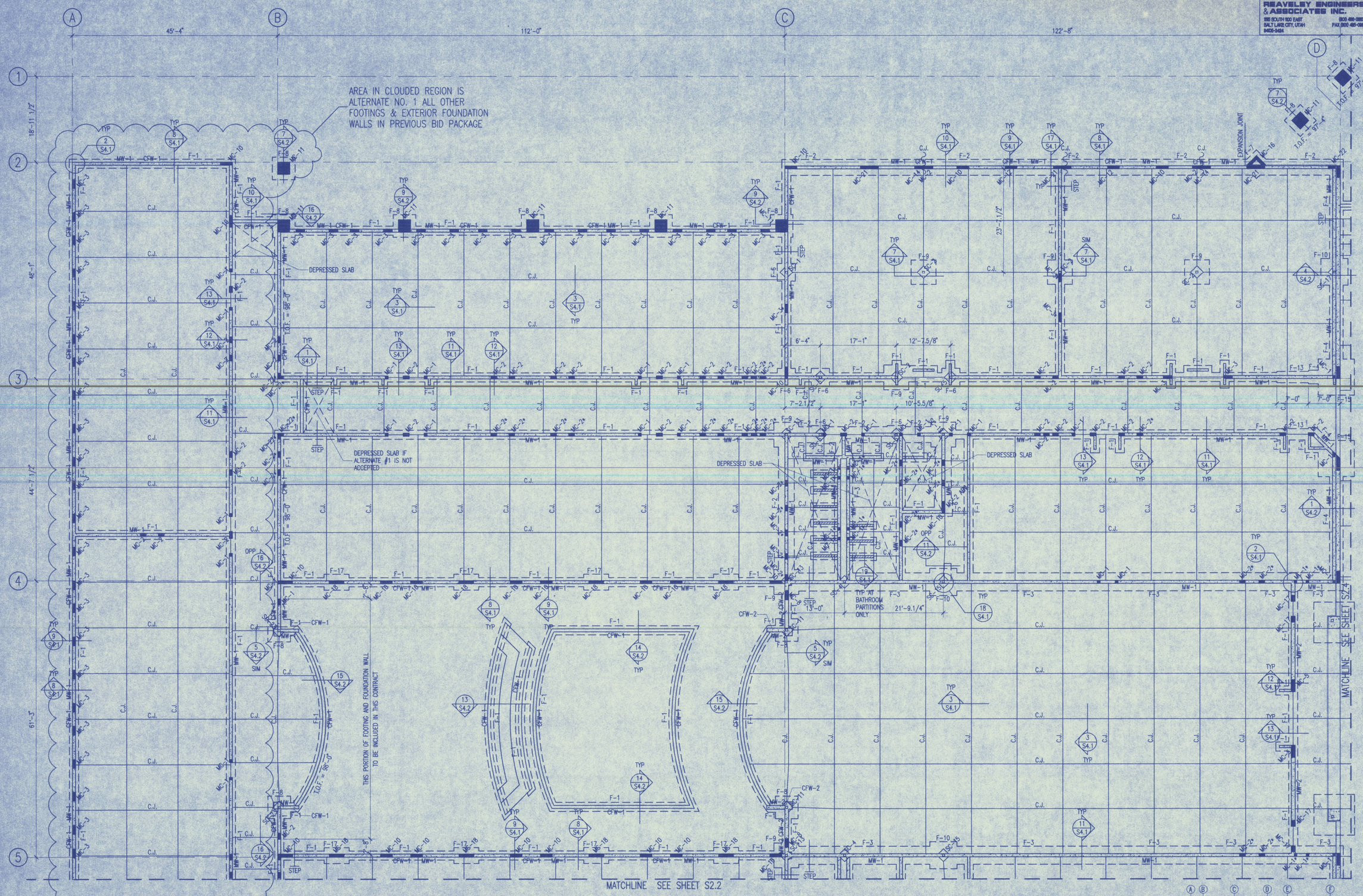

FOOTING AND FOUNDATION PLAN AREA "A"
SCALE 1/8" = 1'-0"

NOTES:

1. T.O.F. = 99'-4" AT ALL INTERIOR FOOTINGS TYP. UNLESS NOTED OTHERWISE.
2. T.O.F. = 98'-0" AT ALL EXTERIOR FOOTINGS TYP. UNLESS NOTED OTHERWISE.
3. CONTROL JOINTS AT REENTRANT CORNERS: PROVIDE 2-#4 PER DETAIL 4/S4.1 TYPICAL.
4. ALL MASONRY COLUMN DOWELS ARE IN PLACE EXCEPT THOSE NOTED WITH AN *. DRILL AND EPOXY PER DETAIL 2/S3.1.
5. COORDINATE WITH ARCH./MECH. ALL DEPRESSED SLABS, SLOPED SLABS, & FLOOR DRAINS.

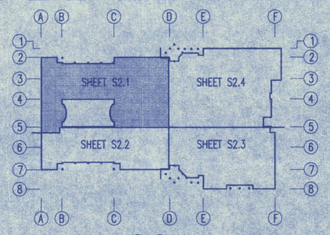

KEY PLAN

REAVELEY ENGINEERS & ASSOCIATES INC.
1165 SOUTH 1100 EAST
SALT LAKE CITY, UTAH
84105-2424
(800) 466-3883
FAX (800) 465-0961

LICENSED CERTIFIED STRUCTURAL ENGINEER NO. 171026 DON W. BARKER UTAH

REVISIONS

NO.	DATE	EXPLANATION	DRAWN

DRAWN BY: C.E.B. CHECKED BY: S.L.K.

THE NEW
ALICE C. HARRIS
INTERMEDIATE SCHOOL
LOCATED IN
TREMONTON, UTAH 84337

NAYLOR WENTWORTH ARCHITECTS
175 West 200 South
Suite 1000
Salt Lake City, Utah 84101
Tel 801 355-5959
Fax 801 355-5960
A PROFESSIONAL CORPORATION

S2.1

THE NEW
ALICE C. HARRIS
INTERMEDIATE SCHOOL
LOCATED IN
TREMONTON, UTAH 84337

REVISIONS			
NO.	DATE	EXPLANATION	DRAWN

DRAWN BY: C.E.B. CHECKED BY: S.L.K.

CERTIFIED STRUCTURAL ENGINEER
No. 7705
DON W. BARKER
UTAH

[illegible] TAYLOR
[illegible] NORTH
[illegible] ARCHITECTS
175 West 200 South
Suite 100
Salt Lake City, Utah 84101
Tel 801 355-5959
Fax 801 355-5960
A PROFESSIONAL CORPORATION

MATCHLINE SEE SHEET S2.3

MATCHLINE SEE SHEET S2.1

CLOUDED AREA NOT INCLUDED IN CONTRACT

EXPANSION JOINT

TYP. OF NON-BEARING MASONRY WALLS

STEP

T.O.F. = 98'-0"

122'-8"

112'-0"

45'-4"

44'-7 1/2"

48'-1"

44'-7 1/2"

KEY PLAN

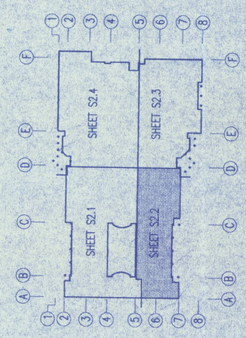

NOTES:
1. T.O.F. = 98'-0" AT ALL INTERIOR FOOTINGS TYP. UNLESS NOTED OTHERWISE.
2. T.O.F. = 98'-0" AT ALL EXTERIOR FOOTINGS TYP. UNLESS NOTED OTHERWISE.
3. CONTROL JOINTS AT REENTRANT CORNERS: PROVIDE 2-#4 PER DETAIL 4/S4.1 TYPICAL

FOOTING AND FOUNDATION PLAN AREA "B"
SCALE 1/8" = 1'-0"

REAVELEY ENGINEERS & ASSOCIATES INC.
155 SOUTH 1100 EAST
SALT LAKE CITY, UTAH
84105-2424
(801) 486-3883
FAX (801) 485-0911

LICENSED CERTIFIED STRUCTURAL ENGINEER
NO. 171026
DON W. BARKER
UTAH

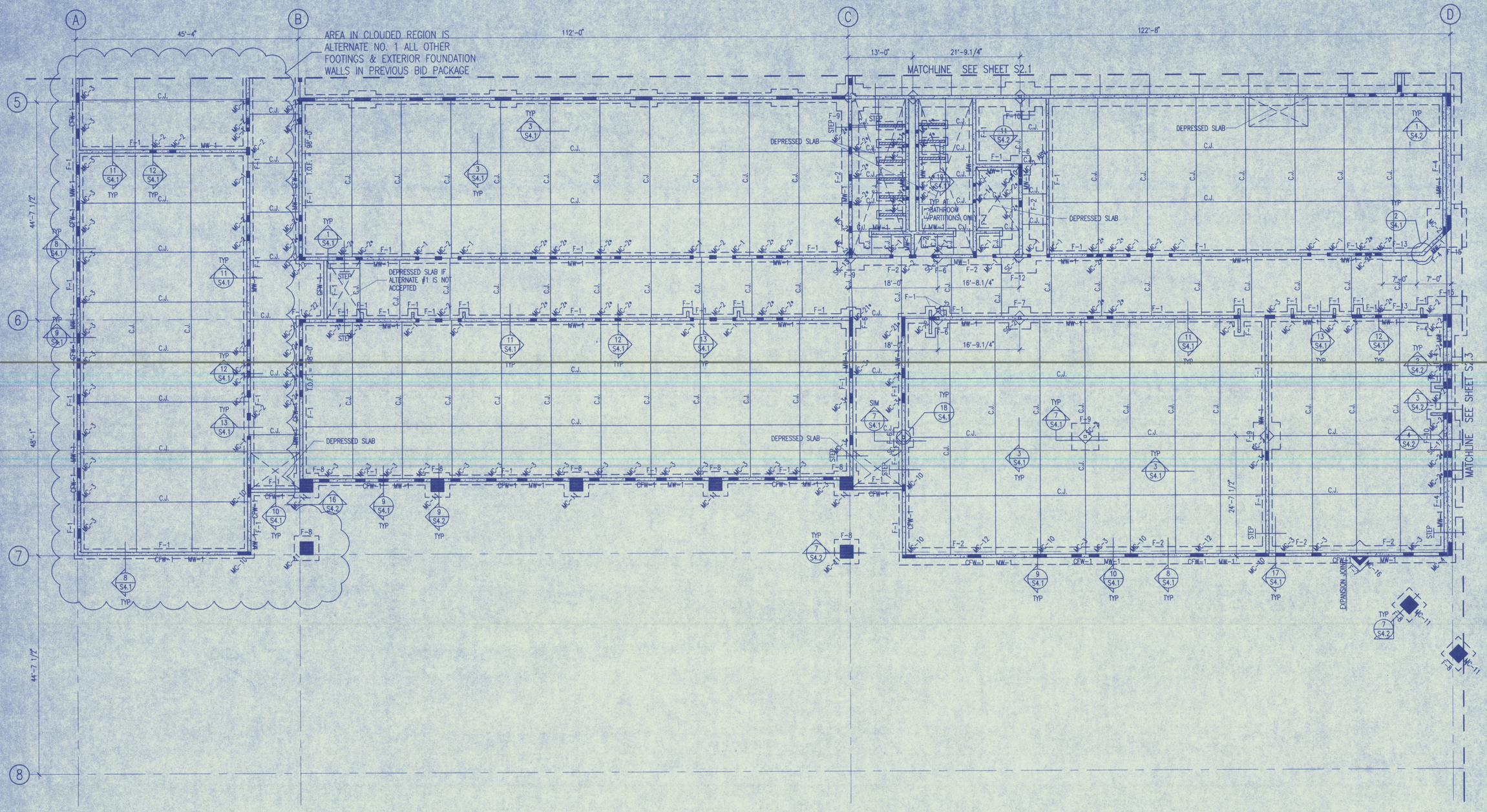

FOOTING AND FOUNDATION PLAN AREA "B"
SCALE 1/8" = 1'-0"

NOTES:
1. T.O.F. = 99'-4" AT ALL INTERIOR FOOTINGS TYP. UNLESS NOTED OTHERWISE.
2. T.O.F. = 98'-0" AT ALL EXTERIOR FOOTINGS TYP. UNLESS NOTED OTHERWISE.
3. CONTROL JOINTS AT REENTRANT CORNERS: PROVIDE 2-#4 PER DETAIL 4/S4.1 TYPICAL.
4. ALL MASONRY COLUMN DOWELS ARE IN PLACE EXCEPT THOSE NOTED WITH AN *. DRILL AND EPOXY PER DETAIL 2/S3.1.
5. COORDINATE WITH ARCH./MECH. ALL DEPRESSED SLABS, SLOPED SLABS, & FLOOR DRAINS.

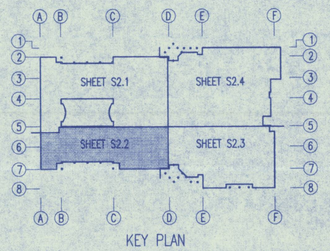

KEY PLAN

REVISIONS

NO.	DATE	EXPLANATION	DRAWN

DRAWN BY: C.E.B. CHECKED BY: S.L.K.

THE NEW
ALICE C. HARRIS
INTERMEDIATE SCHOOL
LOCATED IN
TREMONTON, UTAH 84337

NAYLOR WENTWORTH ARCHITECTS
175 West 200 South
Suite 1000
Salt Lake City, Utah 84101
Tel 801 355-5959
Fax 801 355-5960
A PROFESSIONAL CORPORATION

S2.2

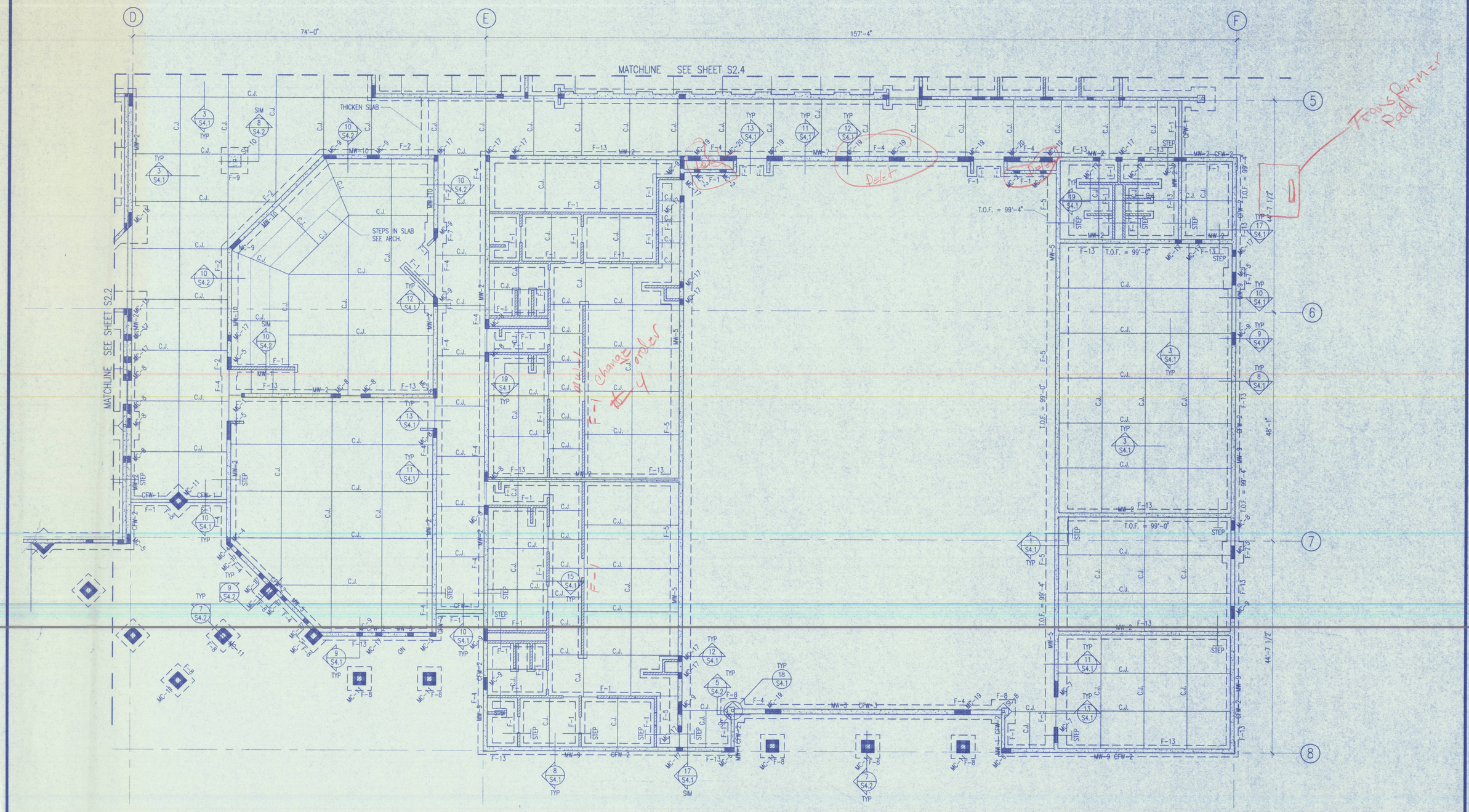

FOOTING AND FOUNDATION PLAN AREA "C"
SCALE 1/8" = 1'-0"

NOTES:
1. T.O.F. = 99'-4" AT ALL INTERIOR FOOTINGS TYP. UNLESS NOTED OTHERWISE.
2. T.O.F. = 98'-0" AT ALL EXTERIOR FOOTINGS TYP. UNLESS NOTED OTHERWISE.
3. CONTROL JOINTS AT REENTRANT CORNERS: PROVIDE 2-#4 PER DETAIL 4/S4.1 TYPICAL.

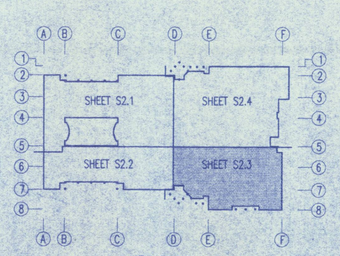

KEY PLAN

CERTIFIED STRUCTURAL ENGINEER NO. 171026 DON W. BARKER UTAH

REVISIONS

NO.	DATE	EXPLANATION	DRAWN

DRAWN BY: C.E.B. CHECKED BY: S.L.K.

THE NEW
ALICE C. HARRIS
INTERMEDIATE SCHOOL
LOCATED IN
TREMONTON, UTAH 84337

175 West 200 South
Suite 1000
Salt Lake City, Utah 84101
Tel 801 355-5959
Fax 801 355-5960
A PROFESSIONAL CORPORATION

NORTH
ECTS

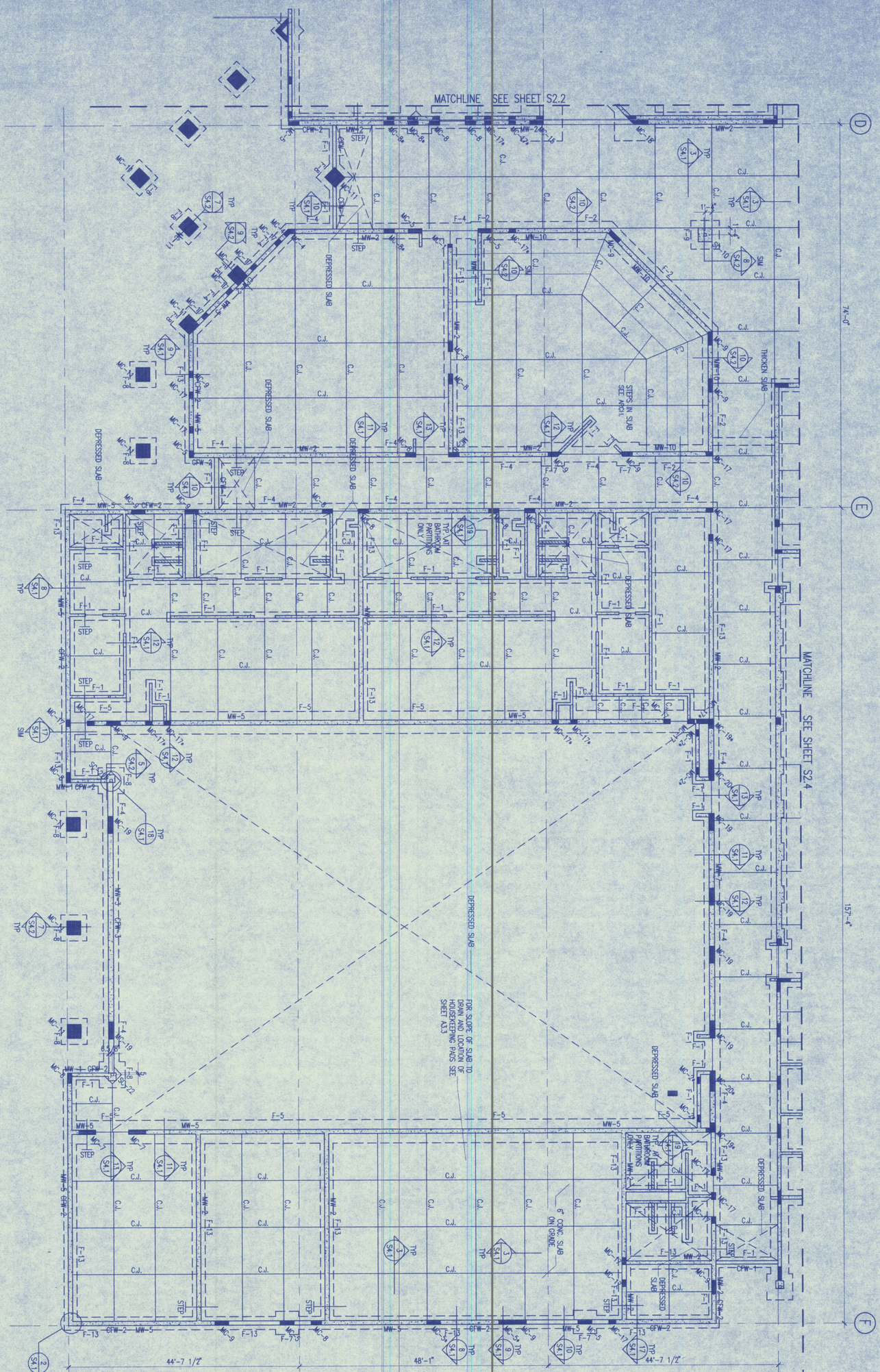

FOOTING AND FOUNDATION PLAN AREA "C"
SCALE 1/8" = 1'-0"

NOTES:
1. T.O.F. = 99'-4" AT ALL INTERIOR FOOTINGS TYP. UNLESS NOTED OTHERWISE.
2. T.O.F. = 98'-0" AT ALL EXTERIOR FOOTINGS TYP. UNLESS NOTED OTHERWISE.
3. CONTROL JOINTS AT REENTRANT CORNERS; PROVIDE 2-#4 PER DETAIL 4/S4.1 TYPICAL.
4. ALL MASONRY COLUMN DOWELS ARE IN PLACE EXCEPT THOSE NOTED WITH AN *. DRILL AND EPOXY PER DETAIL 2/S3.1.
5. COORDINATE WITH ARCH./MECH. ALL DEPRESSED SLABS, SLOPED SLABS, & FLOOR DRAINS.

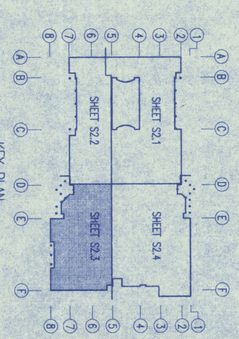

REAVLEY ENGINEERS & ASSOCIATES INC.
136 SOUTH 300 EAST
SALT LAKE CITY, UTAH
84111-3404
(801) 328-1600
FAX (801) 486-1600

S2.3

NAYLOR WENTWORTH ARCHITECTS
175 West 200 South
Suite 1000
Salt Lake City, Utah 84101
Tel 801 355-5959
Fax 801 355-5960
A PROFESSIONAL CORPORATION

THE NEW
ALICE C. HARRIS
INTERMEDIATE SCHOOL
LOCATED IN
TREMONTON, UTAH 84337

REVISIONS			
NO.	DATE	EXPLANATION	DRAWN

DRAWN BY: C.E.B. CHECKED BY: S.L.K.

LICENSED CERTIFIED STRUCTURAL ENGINEER
NO. 177026
DON W. BARKER
UTAH

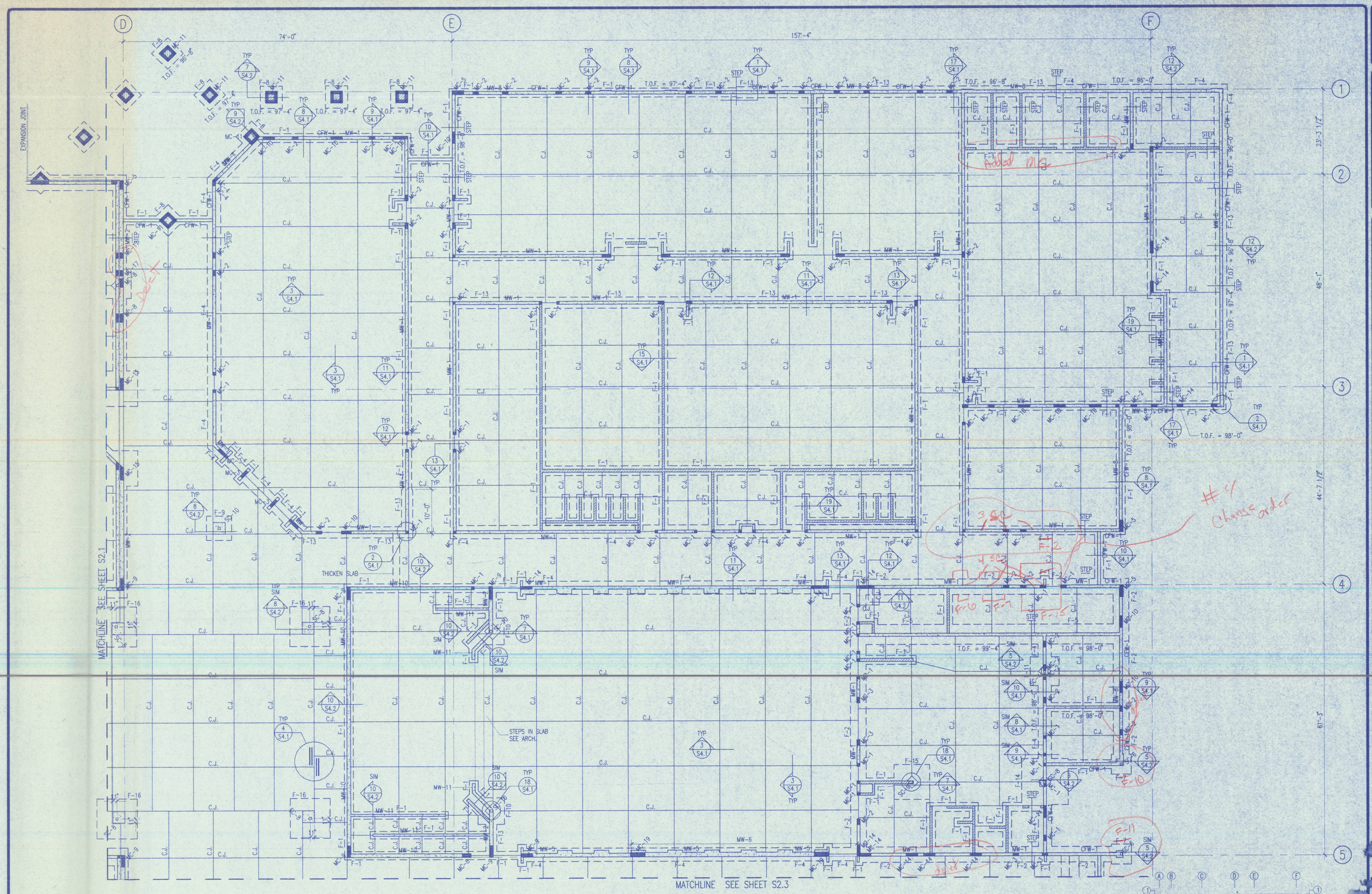

FOOTING AND FOUNDATION PLAN AREA "D"
SCALE 1/8" = 1'-0"

NOTES:
1. T.O.F. = 99'-4" AT ALL INTERIOR FOOTINGS TYP. UNLESS NOTED OTHERWISE.
2. T.O.F. = 98'-0" AT ALL EXTERIOR FOOTINGS TYP. UNLESS NOTED OTHERWISE.
3. CONTROL JOINTS AT REENTRANT CORNERS: PROVIDE 2-#4 PER DETAIL 4/S4.1 TYPICAL.

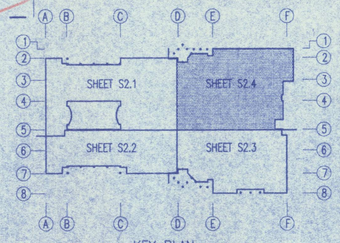

KEY PLAN

CERTIFIED STRUCTURAL ENGINEER NO. 171026 DON W. BARKER UTAH

REVISIONS

NO.	DATE	EXPLANATION	DRAWN

DRAWN BY: C.E.B. CHECKED BY: S.L.K.

THE NEW
ALICE C. HARRIS
INTERMEDIATE SCHOOL
LOCATED IN
TREMONTON, UTAH 84337

175 West 200 South
Suite 1000
Salt Lake City, Utah 84101
Tel 801 355-5959
Fax 801 355-5960
A PROFESSIONAL CORPORATION

NORTH
ECTS

REAVELEY ENGINEERS & ASSOCIATES INC.
1515 SOUTH 1100 EAST
SALT LAKE CITY, UTAH
84105-2424
(800) 486-3883
FAX (800) 485-0091

LICENSED CERTIFIED STRUCTURAL ENGINEER
NO. 171026
DON W. BARKER
UTAH

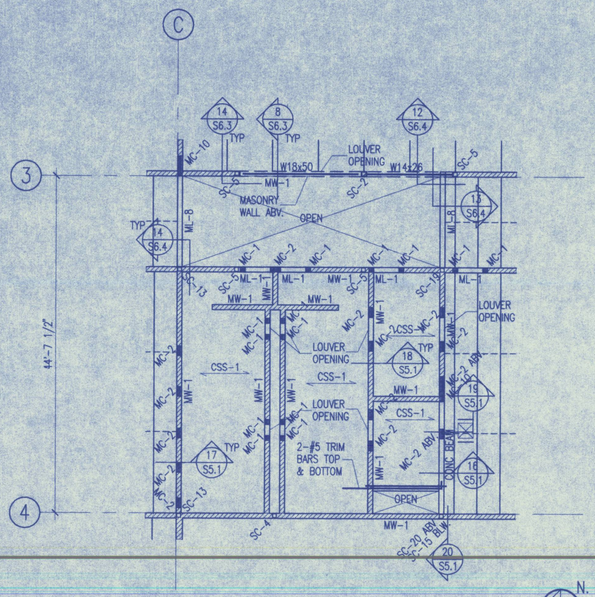

MEZZANINE FRAMING PLAN AREA "A"
SCALE 1/8" = 1'-0"
1 / S2.5

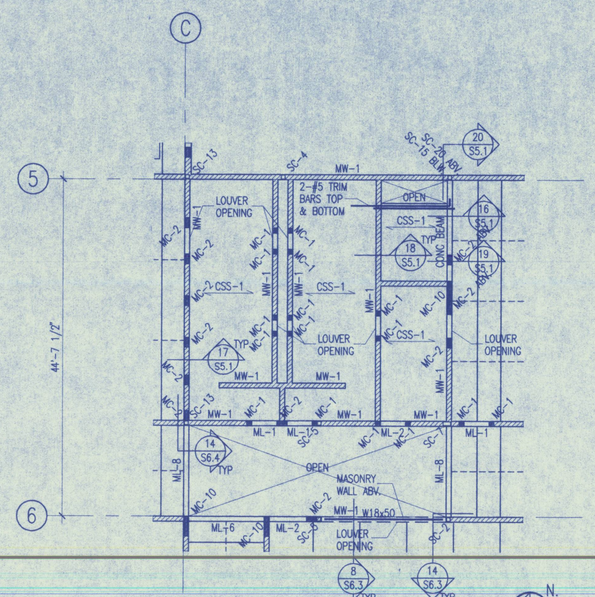

MEZZANINE FRAMING PLAN AREA "B"
SCALE 1/8" = 1'-0"
2 / S2.5

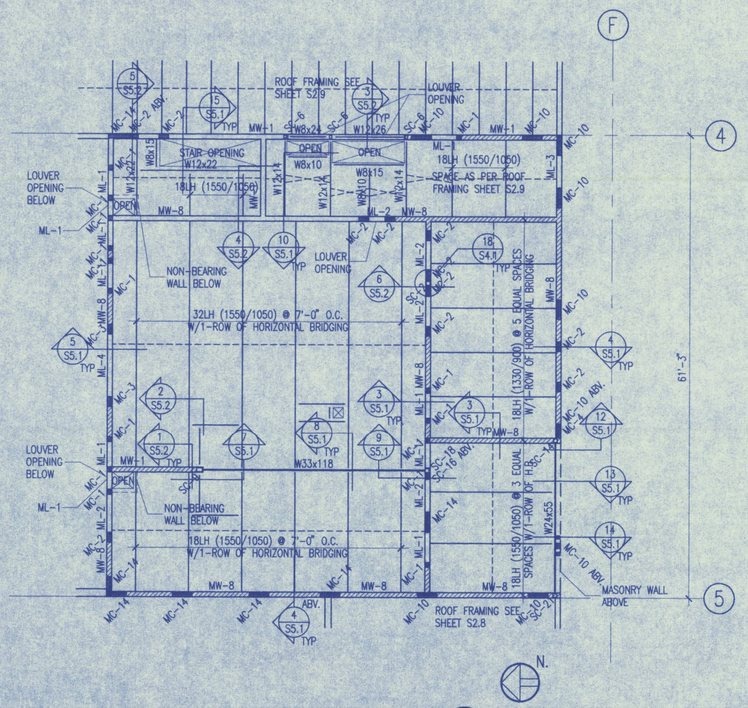

MEZZANINE FRAMING PLAN AREA "D"
SCALE 1/8" = 1'-0"
3 / S2.5

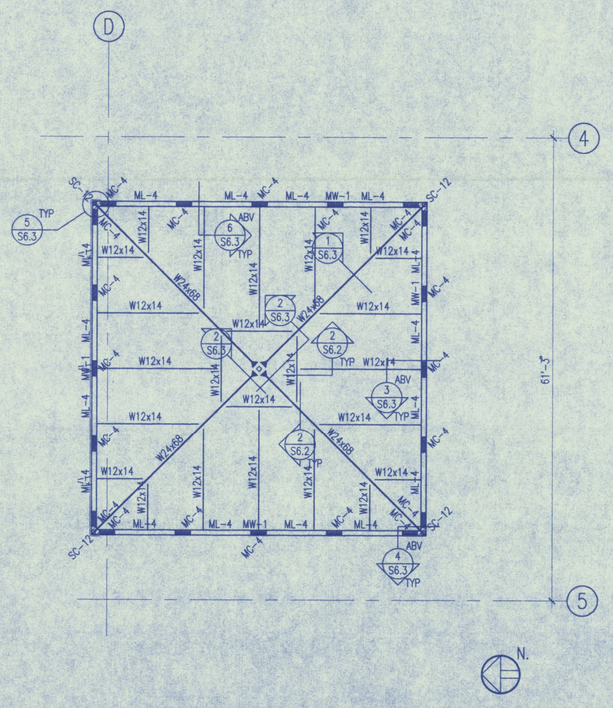

HIGH ROOF FRAMING PLAN AREA "D"
SCALE 1/8" = 1'-0"
4 / S2.5

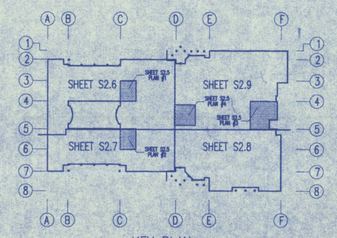

KEY PLAN

REVISIONS

NO.	DATE	EXPLANATION	DRAWN

DRAWN BY: C.E.B. CHECKED BY: S.L.K.

THE NEW
ALICE C. HARRIS
INTERMEDIATE SCHOOL
LOCATED IN
TREMONTON, UTAH 84337

NAYLOR WENTWORTH ARCHITECTS
175 West 200 South
Suite 1000
Salt Lake City, Utah 84101
Tel 801 355-5959
Fax 801 355-5960
A PROFESSIONAL CORPORATION

S2.5

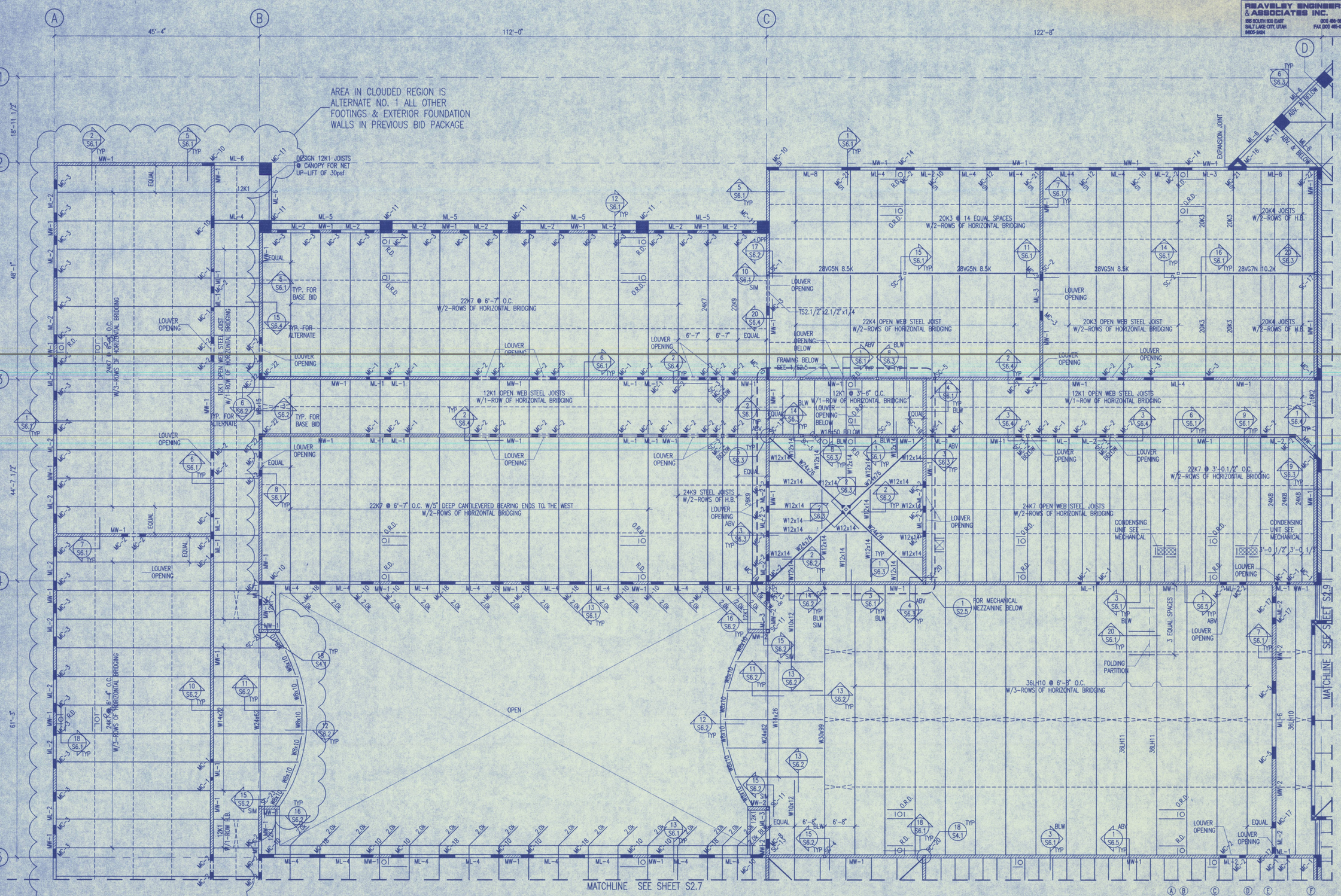

ROOF FRAMING PLAN AREA "A"
SCALE 1/8" = 1'-0"

NOTES:
1. ▶ INDICATES FULL MOMENT CONNECTION

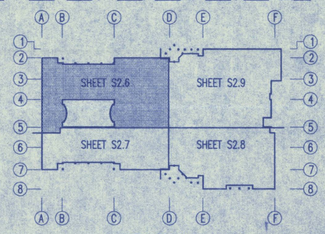

KEY PLAN

REAVELEY ENGINEERS & ASSOCIATES INC.
1515 SOUTH 1100 EAST
SALT LAKE CITY, UTAH
84105-2424
(800) 486-3993
FAX (800) 485-0981

LICENSED CERTIFIED STRUCTURAL ENGINEER NO. 171026 DON W. BARKER UTAH

REVISIONS

NO.	DATE	EXPLANATION	DRAWN

DRAWN BY: C.E.B. CHECKED BY: S.L.K.

THE NEW
ALICE C. HARRIS
INTERMEDIATE SCHOOL
LOCATED IN
TREMONTON, UTAH 84337

NAYLOR WENTWORTH ARCHITECTS
175 West 200 South
Suite 1000
Salt Lake City, Utah 84101
Tel 801 355-5959
Fax 801 355-5960
A PROFESSIONAL CORPORATION

S2.6

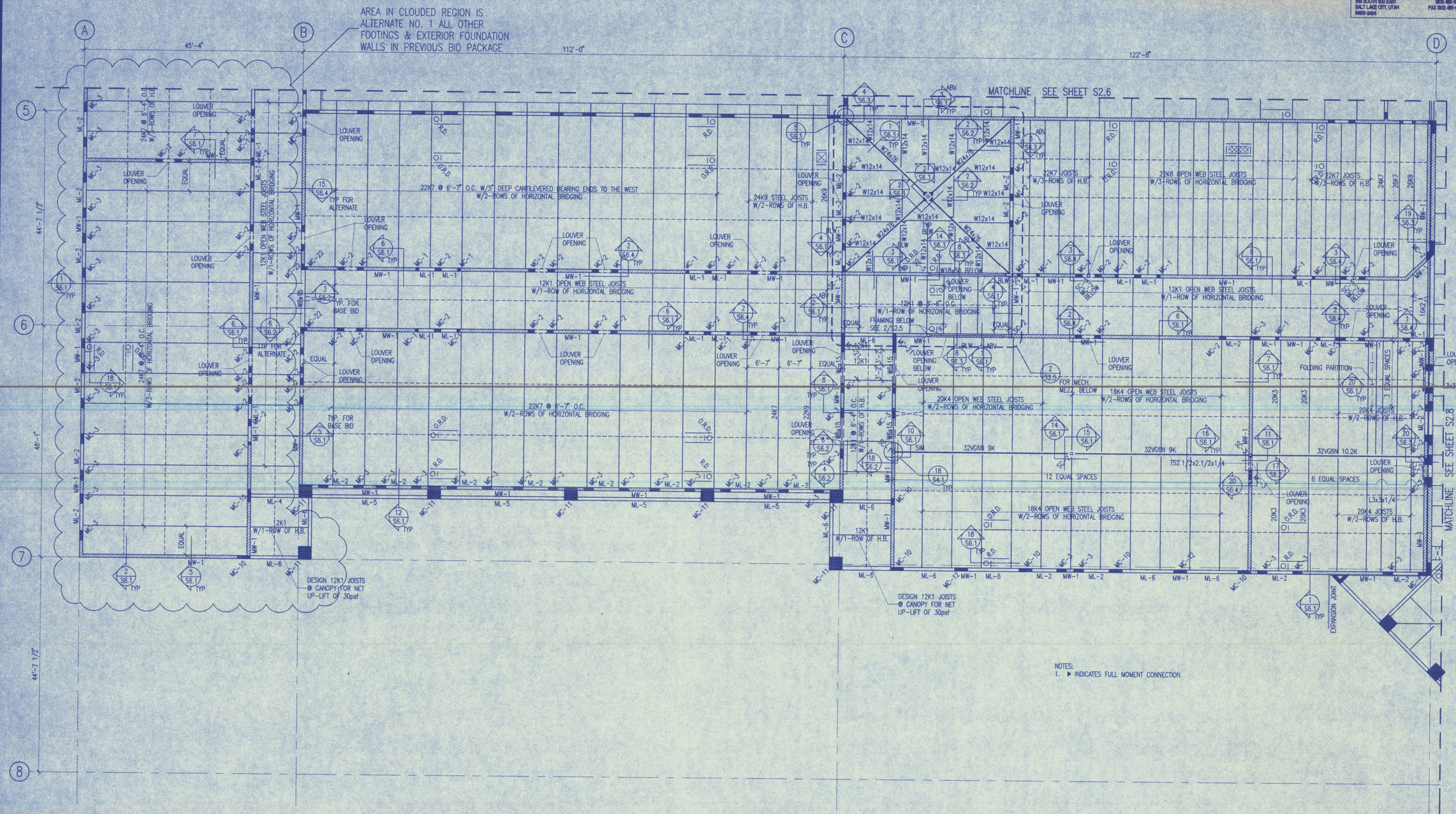

NOTES:
1. ▶ INDICATES FULL MOMENT CONNECTION

ROOF FRAMING PLAN AREA "B"
SCALE 1/8" = 1'-0"

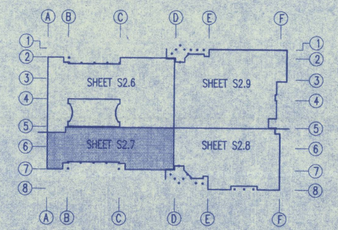

KEY PLAN

REAVELEY ENGINEERS & ASSOCIATES INC.
155 SOUTH 100 EAST
SALT LAKE CITY, UTAH
84105-2424
(800) 486-3693
FAX (800) 485-0981

LICENSED CERTIFIED STRUCTURAL ENGINEER NO. 171026 DON W. BARKER UTAH

REVISIONS

NO.	DATE	EXPLANATION	DRAWN

DRAWN BY: C.E.B. CHECKED BY: S.L.K.

THE NEW
ALICE C. HARRIS
INTERMEDIATE SCHOOL
LOCATED IN
TREMONTON, UTAH 84337

NAYLOR WENTWORTH ARCHITECTS
175 West 200 South
Suite 1000
Salt Lake City, Utah 84101
Tel 801 355-5959
Fax 801 355-5960
A PROFESSIONAL CORPORATION

S2.7

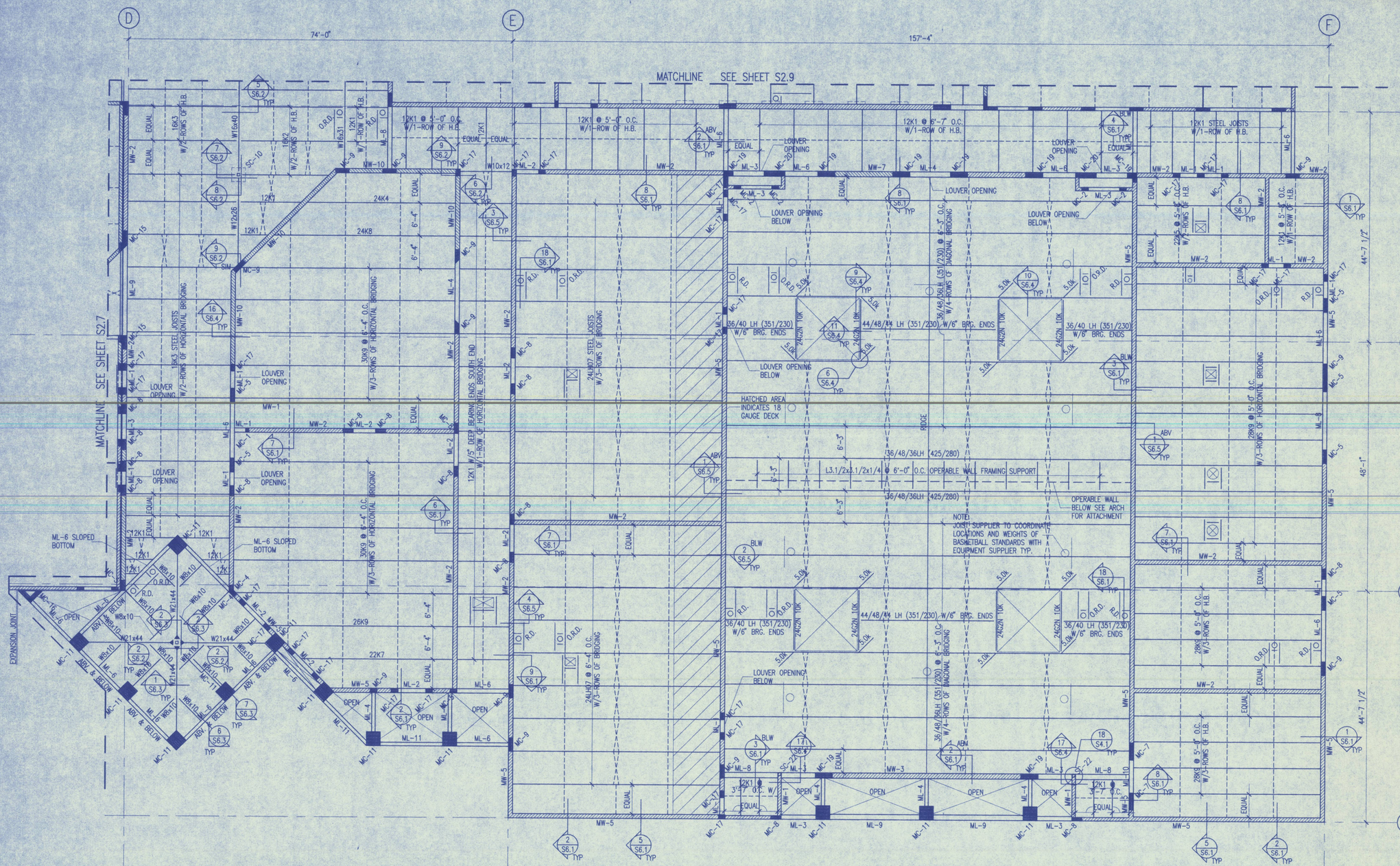

ROOF FRAMING PLAN AREA "C"
SCALE 1/8" = 1'-0"

NOTES:
1. ▶ INDICATES FULL MOMENT CONNECTION

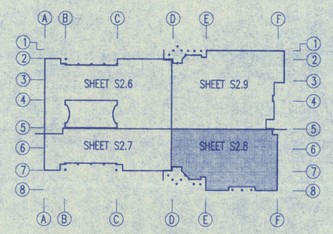

KEY PLAN

REAVELEY ENGINEERS & ASSOCIATES INC.
1515 SOUTH 1100 EAST
SALT LAKE CITY, UTAH
84105-2424
(801) 486-3883
FAX (801) 485-0981

LICENSED CERTIFIED STRUCTURAL ENGINEER NO. 171026 DON W. BARKER UTAH

REVISIONS

NO.	DATE	EXPLANATION	DRAWN

DRAWN BY: C.E.B. CHECKED BY: S.L.K.

THE NEW
ALICE C. HARRIS
INTERMEDIATE SCHOOL
LOCATED IN
TREMONTON, UTAH 84337

NAYLOR WENTWORTH ARCHITECTS
175 West 200 South
Suite 1000
Salt Lake City, Utah 84101
Tel 801 355-5959
Fax 801 355-5960
A PROFESSIONAL CORPORATION

S2.8

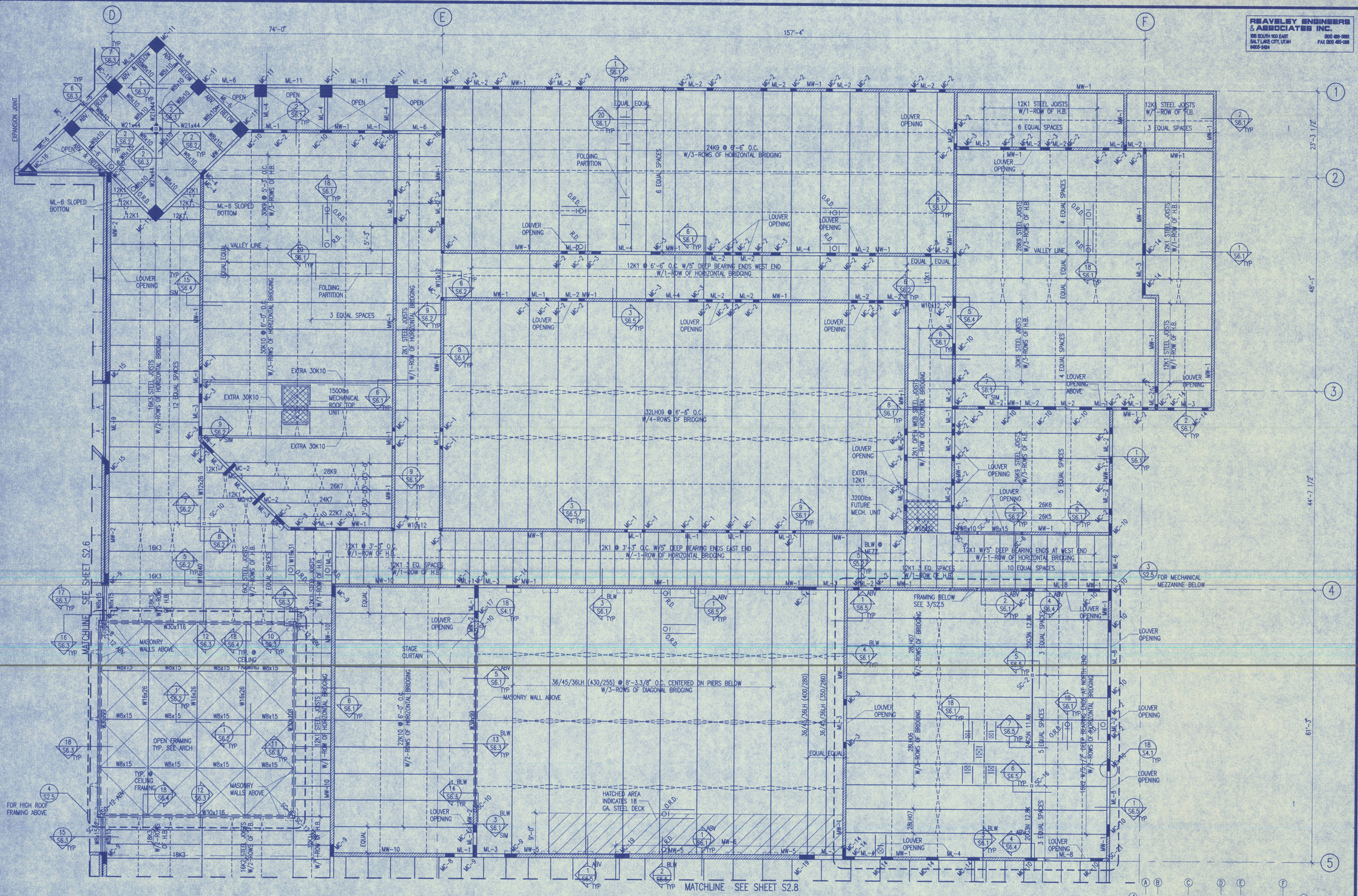

NOTES:
1. ▶ INDICATES FULL MOMENT CONNECTION

ROOF FRAMING PLAN AREA "D"
SCALE 1/8" = 1'-0"

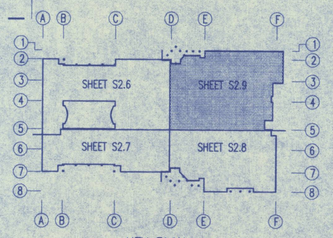

KEY PLAN

REAVELEY ENGINEERS & ASSOCIATES INC.
1515 SOUTH 1100 EAST
SALT LAKE CITY, UTAH
84105-2424
(800) 486-3880
FAX (800) 485-0916

LICENSED CERTIFIED STRUCTURAL ENGINEER
NO. 171026
DON W. BARKER
UTAH

REVISIONS

NO.	DATE	EXPLANATION	DRAWN

DRAWN BY: C.E.B. CHECKED BY: S.L.K.

THE NEW
ALICE C. HARRIS
INTERMEDIATE SCHOOL
LOCATED IN
TREMONTON, UTAH 84337

NAYLOR WENTWORTH ARCHITECTS
175 West 200 South
Suite 1000
Salt Lake City, Utah 84101
Tel 801 355-5959
Fax 801 355-5960
A PROFESSIONAL CORPORATION

S2.9

CONCRETE FOOTING SCHEDULE

CF-2

MARK	WIDTH	LENGTH	THICK	CROSSWISE REINFORCING				LENGTHWISE REINFORCING				REMARKS
				NO.	SIZE	LENGTH	SPACE	NO.	SIZE	LENGTH	SPACE	
F-1	2'-0"	CONT	12"	---	---	---	---	2	#5	CONT	18"	
F-2	3'-6"	CONT	12"	---	#4	3'-0"	10"	4	#5	CONT	12"	
F-3	4'-0"	CONT	12"	---	#5	3'-6"	15"	4	#5	CONT	14"	
F-4	3'-0"	CONT	12"	---	#4	2'-6"	12"	3	#5	CONT	15"	
F-5	4'-6"	CONT	12"	---	#5	4'-0"	12"	4	#5	CONT	16"	
F-6	4'-0"	4'-0"	12"	4	#5	3'-6"	14"	4	#5	3'-6"	14"	
F-7	4'-6"	4'-6"	12"	4	#5	4'-0"	16"	4	#5	4'-0"	16"	
F-8	5'-0"	5'-0"	12"	5	#5	4'-6"	13.5"	5	#5	4'-6"	13.5"	
F-9	5'-6"	5'-6"	12"	5	#5	5'-0"	15"	5	#5	5'-0"	15"	
F-10	6'-0"	6'-0"	12"	6	#5	5'-6"	13.2"	6	#5	5'-6"	13.2"	
F-11	6'-6"	6'-6"	12"	6	#5	6'-0"	14.4"	6	#5	6'-0"	14.4"	
F-12	7'-0"	7'-0"	14"	7	#5	6'-6"	13"	7	#5	6'-6"	13"	
F-13	2'-6"	CONT	12"	---	#4	2'-0"	15"	3	#5	CONT	12"	
F-14	10'-6"	10'-6"	18"	8	#7	10'-0"	17.1"	8	#7	10'-0"	17.1"	
F-15	8'-0"	8'-0"	14"	6	#6	7'-6"	18"	6	#6	7'-6"	18"	
F-16	9'-0"	9'-0"	16"	8	#6	8'-6"	14.5"	8	#6	8'-6"	14.5"	
F-17	3'-6"	5'-6"	12"	5	#5	3'-0"	15"	3	#5	5'-0"	18"	

NOTES:
1. PLACE ALL FOOTING REINFORCING IN BOTTOM OF FOOTING WITH 3" CLEAR CONCRETE COVER UNLESS NOTED OTHERWISE.
2. TOP REINFORCING, WHERE SPECIFIED, SHALL BE PLACED IN THE TOP OF THE FOOTING WITH 2" CLEAR CONCRETE COVER.

MASONRY WALL SCHEDULE

MW-1

MARK	THICK	MATERIALS	REINFORCING		NOTES
			VERTICAL	HORIZONTAL	
MW-1	8"	CMU	#5 @ 32" O.C.	#5 @ 48" O.C.	
MW-2	10"	CMU	#5 @ 32" O.C.	#5 @ 48" O.C.	
MW-3	12"	CMU	#6 @ 24" O.C.	#5 @ 48" O.C.	SEE NOTE 6
MW-4	12"	CMU	#6 @ 24" O.C.	#5 @ 48" O.C.	
MW-5	10"	CMU	#6 @ 24" O.C.	#5 @ 48" O.C.	
MW-6	12"	CMU	#7 @ 24" O.C.	#5 @ 48" O.C.	
MW-7	12"	CMU	#5 @ 32" O.C.	#5 @ 48" O.C.	SEE NOTE 6
MW-8	8"&10"	CMU	#5 @ 32" O.C.	#5 @ 48" O.C. (8") #5@#4 @ 48" O.C. (10")	SEE ARCH. FOR WALL THICKNESS
MW-9	10"&12"	CMU	#6 @ 24" O.C.	#5 @ 48" O.C. (10") #5@#4 @ 48" O.C. (12")	SEE ARCH. FOR WALL THICKNESS
MW-10	10"	CMU	#5 @ 24" O.C.	#5 @ 48" O.C.	GROUT SOLID BELOW GRADE
MW-11	8"	CMU	#5 @ 24" O.C.	#5 @ 48" O.C.	GROUT SOLID BELOW GRADE

NOTES:
1. SEE PLANS, DETAILS AND GENERAL STRUCTURAL NOTES FOR ADDITIONAL REINFORCING REQUIREMENTS.
2. GROUT SOLID ALL CELLS BELOW GRADE, CELLS CONTAINING EMBEDS (HSA'S, DBA'S, ANCHOR BOLTS, ETC.), AND CELLS CONTAINING REINFORCING.
3. POSITION BARS AND CONSOLIDATE GROUT AS PER THE GENERAL STRUCTURAL NOTES.
4. HORIZONTAL WALL REINFORCING SHALL BE PLACED INSIDE THE VERTICALS OF MASONRY COLUMNS.
5. HORIZONTAL WALL REINFORCING SHALL CONTINUE THROUGH MASONRY LINTELS. WHERE BOTH HORIZONTAL WALL REINFORCING AND LINTEL REINFORCING OCCUR IN THE SAME COURSE, THE LARGER BARS ARE TO REPLACE THE SMALLER BARS.
6. WALL REQUIRES SPECIAL INSPECTION

CONCRETE FOUNDATION WALL SCHEDULE

CFW-

MARK	THICK	HORIZONTAL REINFORCING	VERTICAL REINFORCING	TOP & BOTTOM HORIZONTAL BARS	NOTES
CFW-1	8"	#5 @ 15" O.C.	#4 @ 16" O.C.	1-#7	TYPE A
CFW-2	10"	#5 @ 12" O.C.	#4 @ 13" O.C.	1-#7	TYPE A
CFW-3	12"	#4 @ 13" O.C. E.F.	#4 @ 18" O.C. E.F.	2-#5	TYPE C

PLACEMENT TYPE

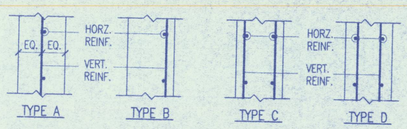

TYPE A TYPE B TYPE C TYPE D

E.F. = EACH FACE
O.F. = OUTSIDE FACE (AGAINST SOIL)
I.F. = INSIDE FACE
3L = THREE LAYERS

CONCRETE SUSPENDED SLAB SCHEDULE

CSS-

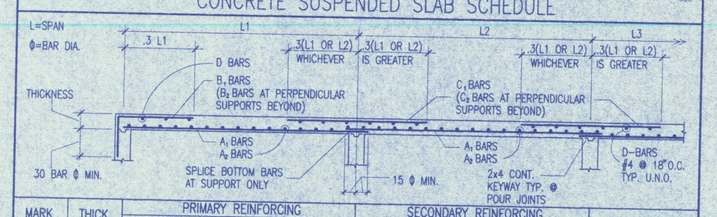

MARK	THICK	PRIMARY REINFORCING			SECONDARY REINFORCING			D BARS
		A_1 BARS	B_1 BARS	C_1 BARS	A_2 BARS	B_2 BARS	C_2 BARS	
CSS-1	8"	#4 @ 8" O.C.	#5 @ 16" O.C.	#5 @ 12" O.C.	#4 @ 8" O.C.	#5 @ 16" O.C.	#5 @ 12" O.C.	#4 @ 18" O.C.

NOTES.
1. PRIMARY REINFORCING SHALL RUN PARALLEL TO THE DIRECTION OF THE ARROW (⟶).
2. PRIMARY BOTTOM REINFORCING SHALL BE PLACED BELOW SECONDARY BOTTOM REINFORCING. PRIMARY TOP REINFORCING SHALL BE PLACED ABOVE SECONDARY TOP REINFORCING.

CERTIFIED STRUCTURAL ENGINEER NO. 171026 DON W. BARKER UTAH

REVISIONS

NO.	DATE	EXPLANATION	DRAWN

DRAWN BY: C.E.B. CHECKED BY: S.L.K.

THE NEW
ALICE C. HARRIS
INTERMEDIATE SCHOOL
LOCATED IN
TREMONTON, UTAH 84337

175 West 200 South
Suite 1000
Salt Lake City, Utah 84101
Tel 801 355-5959
Fax 801 355-5960
A PROFESSIONAL CORPORATION

REAVELEY ENGINEERS & ASSOCIATES INC.
515 SOUTH 1100 EAST
SALT LAKE CITY, UTAH
84105-2434
(801) 486-3883
FAX (801) 485-0186

REGISTERED CERTIFIED STRUCTURAL ENGINEER
NO. 171026
DON W. BARKER
UTAH

REVISIONS

NO.	DATE	EXPLANATION	DRAWN

DRAWN BY: C.E.B. CHECKED BY: S.L.K.

CONCRETE FOOTING SCHEDULE

CF-2

MARK	WIDTH	LENGTH	THICK	CROSSWISE REINFORCING NO.	CROSSWISE REINFORCING SIZE	LENGTHWISE REINFORCING LENGTH	LENGTHWISE REINFORCING SPACE	LENGTHWISE REINFORCING NO.	LENGTHWISE REINFORCING SIZE	LENGTHWISE REINFORCING LENGTH	LENGTHWISE REINFORCING SPACE	REMARKS
F-1	2'-0"	CONT	12"	---	---	---	---	2	#5	CONT	18"	
F-2	3'-6"	CONT	12"	---	#4	3'-0"	10"	4	#5	CONT	12"	
F-3	4'-0"	CONT	12"	---	#5	3'-6"	15"	4	#5	CONT	14"	
F-4	3'-0"	CONT	12"	---	#4	2'-6"	12"	3	#5	CONT	15"	
F-5	4'-6"	CONT	12"	---	#5	4'-0"	12"	4	#5	CONT	16"	
F-6	4'-0"	4'-0"	12"	4	#5	3'-6"	14"	4	#5	3'-6"	14"	
F-7	4'-6"	4'-6"	12"	4	#5	4'-0"	16"	4	#5	4'-0"	16"	
F-8	5'-0"	5'-0"	12"	5	#5	4'-6"	13.5"	5	#5	4'-6"	13.5"	
F-9	5'-6"	5'-6"	12"	5	#5	5'-0"	15"	5	#5	5'-0"	15"	
F-10	6'-0"	6'-0"	12"	6	#5	5'-6"	13.2"	6	#5	5'-6"	13.2"	
F-11	6'-6"	6'-6"	12"	6	#5	6'-0"	14.4"	6	#5	6'-0"	14.4"	
F-12	7'-0"	7'-0"	14"	7	#5	6'-6"	13"	7	#5	6'-6"	13"	
F-13	2'-6"	CONT	12"	---	#4	2'-0"	15"	3	#5	CONT	12"	
F-14	10'-6"	10'-6"	18"	8	#7	10'-0"	17.1"	8	#7	10'-0"	17.1"	
F-15	8'-0"	8'-0"	14"	6	#6	7'-6"	18"	6	#6	7'-6"	18"	
F-16	9'-0"	9'-0"	16"	8	#6	8'-6"	14.5"	8	#6	8'-6"	14.5"	
F-17	3'-6"	5'-6"	12"	5	#5	3'-0"	15"	3	#5	5'-0"	18"	

NOTES:
1. PLACE ALL FOOTING REINFORCING IN BOTTOM OF FOOTING WITH 3" CLEAR CONCRETE COVER UNLESS NOTED OTHERWISE.
2. TOP REINFORCING, WHERE SPECIFIED, SHALL BE PLACED IN THE TOP OF THE FOOTING WITH 2" CLEAR CONCRETE COVER.

MASONRY WALL SCHEDULE

MW-1

MARK	THICK	MATERIALS	REINFORCING VERTICAL	REINFORCING HORIZONTAL	NOTES
MW-1	8"	CMU	#5 @ 32" O.C.	#5 @ 48" O.C.	
MW-2	10"	CMU	#5 @ 32" O.C.	#5 @ 48" O.C.	
MW-3	12"	CMU	#6 @ 24" O.C.	#5 @ 48" O.C.	SEE NOTE 6
MW-4	12"	CMU	#6 @ 24" O.C.	#5 @ 48" O.C.	
MW-5	10"	CMU	#6 @ 24" O.C.	#5 @ 48" O.C.	
MW-6	12"	CMU	#7 @ 24" O.C.	#5 @ 48" O.C.	
MW-7	12"	CMU	#5 @ 32" O.C.	#5 @ 48" O.C.	SEE NOTE 6
MW-8	8"	CMU	#6 @ 32" O.C.	#5 @ 48" O.C.	SOLID GROUTED
MW-9	←	NOT USED			→
MW-10	10"	CMU	#5 @ 24" O.C.	#5 @ 48" O.C.	GROUT SOLID BELOW GRADE
MW-11	8"	CMU	#5 @ 24" O.C.	#5 @ 48" O.C.	GROUT SOLID BELOW GRADE

NOTES:
1. SEE PLANS, DETAILS AND GENERAL STRUCTURAL NOTES FOR ADDITIONAL REINFORCING REQUIREMENTS.
2. GROUT SOLID ALL CELLS BELOW GRADE, CELLS CONTAINING EMBEDS (HSA'S, DBA'S, ANCHOR BOLTS, ETC.), AND CELLS CONTAINING REINFORCING.
3. POSITION BARS AND CONSOLIDATE GROUT AS PER THE GENERAL STRUCTURAL NOTES.
4. HORIZONTAL WALL REINFORCING SHALL BE PLACED INSIDE THE VERTICALS OF MASONRY COLUMNS.
5. HORIZONTAL WALL REINFORCING SHALL CONTINUE THROUGH MASONRY LINTELS. WHERE BOTH HORIZONTAL WALL REINFORCING AND LINTEL REINFORCING OCCUR IN THE SAME COURSE, THE LARGER BARS ARE TO REPLACE THE SMALLER BARS.
6. WALL REQUIRES SPECIAL INSPECTION

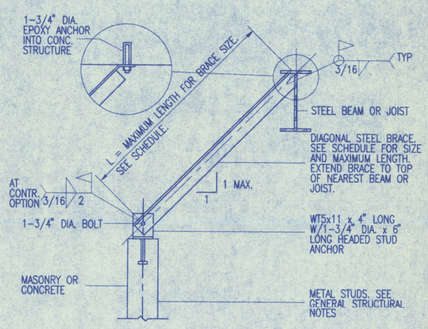

TYPICAL BRACE DETAIL

NON-BEARING MASONRY OR CONCRETE WALL BRACING NOTES

1. ALL NON-BEARING WALLS AND PARTITIONS SHALL BE BRACED AT THE TOP TO RESIST LATERAL FORCES.
2. WALL AND PARTITIONS MAY BE BRACED BY INTERSECTING WALLS PROVIDED THAT THE WALLS OR PARTITIONS THAT SUPPORT THE WALL ARE EQUAL TO OR GREATER IN HEIGHT THAN THE WALL WHICH THEY BRACE. THE LENGTH OF THE MASONRY SUPPORT WALL SHALL BE 4'-0" MINIMUM. THE MAXIMUM LENGTH OF WALL WHICH MAY BE BRACED WITH OTHER WALLS IS SIXTEEN FEET (16'-0") FOR MASONRY WALLS.
3. WALLS WHICH DO NOT MEET THE REQUIREMENTS OF NOTE #2 SHALL BE BRACED ACCORDING TO THE FOLLOWING RULE:
   A. WALLS AND PARTITIONS THAT ARE TERMINATED JUST ABOVE THE CEILING SHALL BE BRACED ACCORDING TO THIS DETAIL. SPACING OF BRACES SHALL NOT EXCEED 8'-0" FROM ANOTHER BRACE OR INTERSECTING WALL. SEE BRACE SCHEDULE FOR CORRECT SIZE AND MAXIMUM LENGTH.

NON-BEARING MASONRY OR CONCRETE WALL BRACE SCHEDULE

BRACE SIZE	MAX LENGTH "L"
L-2.1/2x2.1/2x3/16	8'-0"
L-3x3x3/16	9'-6"
L-3.1/2x3.1/2x1/4	11'-0"
L-4x4x1/4	13'-0"
L-5x5x5/16	16'-3"
L-6x6x5/16	19'-9"

NON-BEARING MASONRY OR CONCRETE WALL BRACING DETAIL & SCHEDULE
NO SCALE
1 / S3.1

CONCRETE FOUNDATION WALL SCHEDULE

CFW-1

MARK	THICK	HORIZONTAL REINFORCING	VERTICAL REINFORCING	TOP & BOTTOM HORIZONTAL BARS	NOTES
CFW-1	8"	#5 @ 15" O.C.	#4 @ 16" O.C.	1-#7	TYPE A
CFW-2	10"	#5 @ 12" O.C.	#4 @ 13" O.C.	1-#7	TYPE A
CFW-3	12"	#4 @ 13" O.C. E.F.	#4 @ 18" O.C. E.F.	2-#5	TYPE C

PLACEMENT TYPE

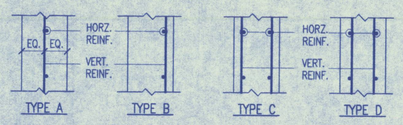

E.F. = EACH FACE
O.F. = OUTSIDE FACE (AGAINST SOIL)
I.F. = INSIDE FACE
3L = THREE LAYERS

CONCRETE SUSPENDED SLAB SCHEDULE

CSS-1

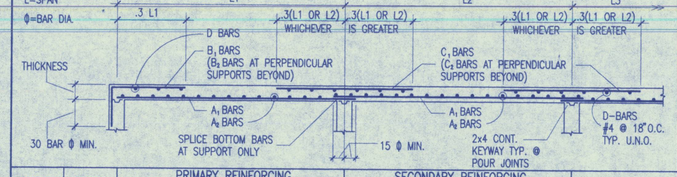

MARK	THICK	PRIMARY REINFORCING A1 BARS	PRIMARY REINFORCING B1 BARS	PRIMARY REINFORCING C1 BARS	SECONDARY REINFORCING A2 BARS	SECONDARY REINFORCING B2 BARS	SECONDARY REINFORCING C2 BARS	D BARS
CSS-1	8"	#4 @ 8" O.C.	#5 @ 16" O.C.	#5 @ 12" O.C.	#4 @ 8" O.C.	#5 @ 16" O.C.	#5 @ 12" O.C.	#4 @ 18" O.C.

NOTES.
1. PRIMARY REINFORCING SHALL RUN PARALLEL TO THE DIRECTION OF THE ARROW (←→).
2. PRIMARY BOTTOM REINFORCING SHALL BE PLACED BELOW SECONDARY BOTTOM REINFORCING. PRIMARY TOP REINFORCING SHALL BE PLACED ABOVE SECONDARY TOP REINFORCING.

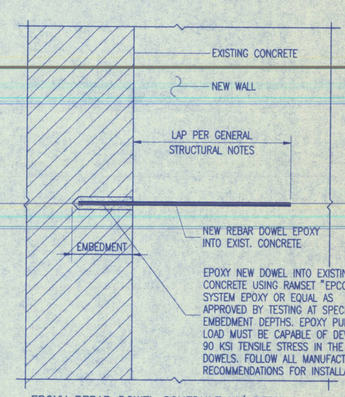

EPOXY REBAR DOWEL SCHEDULE

BAR SIZE	EMBEDMENT
#4	6.1/2"
#5	7.1/2"
#6	10"
#7	13"
#8	16"

EPOXY REBAR DOWEL SCHEDULE W/ DETAIL
NO SCALE
2 / S3.1

THE NEW
ALICE C. HARRIS
INTERMEDIATE SCHOOL
LOCATED IN
TREMONTON, UTAH 84337

NAYLOR WENTWORTH ARCHITECTS
175 West 200 South Suite 1000
Salt Lake City, Utah 84101
Tel 801 355-5959
Fax 801 355-5980
A PROFESSIONAL CORPORATION

S3.1

MASONRY LINTEL SCHEDULE

ML-1

MARK	LINTEL DEPTH	LINTEL WIDTH	MASONRY TYPE	LINTEL		MAXIMUM SPAN	REMARKS
				HORIZONTAL	STIRRUPS		
ML-1	8"	6",8",10" OR 12"	BRICK OR CMU	1- #7 CONT.	------	3'-4"	
ML-2	16"	6",8",10" OR 12"	BRICK OR CMU	1- #7 CONT. TOP & BOT.	#3 AT 8" O.C.	5'-4"	
ML-3	24"	6",8",10" OR 12"	BRICK OR CMU	1- #7 CONT. TOP & BOT.	#3 AT 8" O.C.	8'-0"	
ML-4	32"	6",8",10" OR 12"	BRICK OR CMU	1- #7 CONT. TOP & BOT.	#3 AT 8" O.C.	10'-0"	
ML-5	56"	8",10"	CMU	2- #8 CONT. TOP & BOT.	#3 AT 8" O.C.		
ML-6	40"	8",10"	CMU	1- #7 CONT. TOP & BOT.	#3 AT 8" O.C.		
ML-7	56"	8",10"	CMU	1- #7 CONT. TOP & BOT.	#3 AT 8" O.C.		
ML-8	48"	8",10" OR 12"	CMU	1- #7 CONT. TOP & BOT.	#3 AT 8" O.C.		
ML-9	56"	8",10"	CMU	2- #7 CONT. TOP & BOT.	#3 AT 8" O.C.		
ML-10	64"	8",10" OR 12"	CMU	2- #7 CONT. TOP & BOT.	#3 AT 8" O.C.		

NOTES:

1. MASONRY LINTELS ML-1 THROUGH ML-4 SHALL BE USED OVER OPENINGS IN MASONRY WALLS WHEN A SPECIFIC MASONRY LINTEL IS NOT OTHERWISE SPECIFIED. THE MASONRY LINTEL TO BE USED SHALL BE DETERMINED BY THE MAXIMUM SPAN AS SPECIFIED IN THIS SCHEDULE. WHEN A SPECIFIC MASONRY LINTEL IS CALLED OUT ON THE PLAN, THE MAXIMUM SPAN AS NOTED IN THIS SCHEDULE SHALL NOT APPLY.
2. MASONRY LINTELS ML-1 THOUGH ML-4 SHALL NOT BE LOCATED BELOW ANY FLOOR, OR ROOF BEAM, OR GIRDER, OR ANY OTHER CONCENTRATED LOAD UNLESS SHOWN SPECIFICALLY ON THE PLAN SHEET. JOISTS SHALL NOT BEAR ON ANY LINTEL LESS THAN 16" DEEP.
3. FOR MASONRY LINTELS NOT SHOWN ON THE DRAWINGS THAT CARRY ANY FLOOR, OR ROOF BEAM, OR GIRDER, OR ANY OTHER CONCENTRATED LOAD, OR THAT SPAN GREATER THAN 10'-0" CONSULT THE STRUCTURAL ENGINEER.
4. EXTEND ALL HORIZONTAL REINFORCING 48 BAR DIAMETERS BEYOND THE EDGE OF THE OPENING. IF HORIZONTAL REINFORCING CANNOT BE EXTENDED 48 BAR DIAMETERS BEYOND THE EDGE OF THE OPENING, PROVIDE 90 DEGREE STANDARD HOOK.
5. GROUT EACH MASONRY LINTEL MONOLITHICALLY.
6. SPLICE TOP BARS AT MIDSPAN OF LINTEL ONLY.
7. SPLICE BOTTOM BARS OVER SUPPORTS ONLY.
8. FOR WALL ABOVE LINTEL, DOWEL VERTICAL REINFORCING INTO FULL DEPTH OF THE LINTEL OR 48 BAR DIAMETERS, WHICHEVER IS LESS.
9. HORIZONTAL WALL REINFORCING SHALL CONTINUE THROUGH MASONRY LINTELS. WHERE BOTH HORIZONTAL WALL REINFORCING AND LINTEL REINFORCING WOULD OCCUR IN THE SAME COURSE, THE LARGER BARS ARE TO REPLACE THE SMALLER BARS.

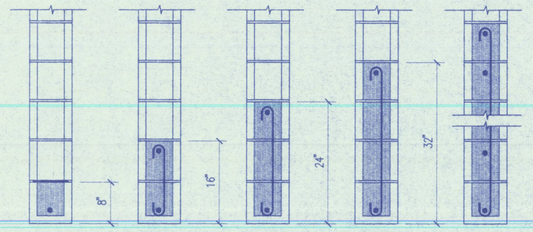

ML-1 ML-2 ML-3 ML-4 ML-5

TYPICAL MASONRY LINTEL DETAILS — 1 / S3.2 (ML-DET)
NO SCALE

MASONRY COLUMN SCHEDULE

MC-1

MARK	SIZE	REINFORCING		REMARKS
		VERICAL	TIES	
MC-1	8x8	2-#5	#2 @ 8" O.C.	SEE DETAIL 4/S3.2
MC-2	8x16	4-#5	#2 @ 8" O.C.	SEE DETAIL 5/S3.2
MC-3	8x24	6-#5	2-#2 @ 8" O.C.	SEE DETAIL 6/S3.2
MC-4	8x24	6-#6	2-#2 @ 8" O.C.	SEE DETAIL 6/S3.2
MC-5	10x32	8-#6	2-#2 @ 8" O.C.	SEE DETAIL 7/S3.2
MC-6	12x24	6-#5	2-#2 @ 8" O.C.	SEE DETAIL 6/S3.2
MC-7	10x40	10-#6	3-#2 @ 8" O.C.	SEE DETAIL 8/S3.2
MC-8	10x24	6-#5	2-#2 @ 8" O.C.	SEE DETAIL 6/S3.2
MC-9	10x32	8-#5	2-#2 @ 8" O.C.	SEE DETAIL 7/S3.2
MC-10	8x32	8-#6	2-#2 @ 8" O.C.	SEE DETAIL 7/S3.2
MC-11	32x32	12-#6	#3 @ 8" O.C.	SEE DETAIL 10/S3.2
MC-12	8x32	8-#5	2-#2 @ 8" O.C.	SEE DETAIL 7/S3.1
MC-13	10x48	12-#5	3-#2 @ 8" O.C.	SEE DETAIL 9/S3.1
MC-14	8x32	8-#5	2-#2 @ 8" O.C.	SEE DETAIL 7/S3.1
MC-15	10x32	8-#5	2-#2 @ 8" O.C.	SEE DETAIL 7/S3.1
MC-16	8x32x32	12-#6	4-#2 @ 8" O.C.	SEE DETAIL 11/S3.2
MC-17	10x16	4-#5	#2 @ 8" O.C.	SEE DETAIL 5/S3.1
MC-18	10x40	10-#5	3-#2 @ 8" O.C.	SEE DETAIL 8/S3.1
MC-19	12x40	10-#7	3-#2 @ 8" O.C.	SEE DETAIL 8/S3.1
MC-20	12x48	12-#7	3-#2 @ 8" O.C.	SEE DETAIL 9/S3.1

NOTES:

1. THE CENTERLINE OF VERTICAL BARS SHALL BE LOCATED 2 1/2" FROM THE FACE OF THE MASONRY. HORIZONTAL BARS SHALL BE LOCATED TO THE INSIDE OF THE VERTICAL BARS.
2. UNLESS NOTED OTHERWISE, VERTICAL REINFORCING AND TIES SHALL EXTEND FULL HEIGHT OF THE WALL.
3. MASONRY COLUMN VERTICAL BARS OR DOWELS IN CONCRETE FOUNDATION WALLS SHALL BE TIED WITH #3 TIES AT 8" O.C.
4. ALL COLUMNS WHICH OCCUR IN WALLS THAT REQUIRE SPECIAL INSPECTION SHALL ALSO BE SPECIAL INSPECTED IN ADDITION MC-12 AND MC-15 COLUMNS SHALL BE SPECIAL INSPECTED.

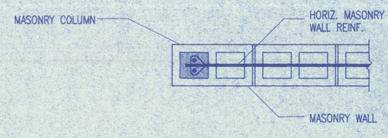

TYPICAL 8" x 8" MASONRY COLUMN — 4 / S3.2 (MC1-PL01)
NO SCALE

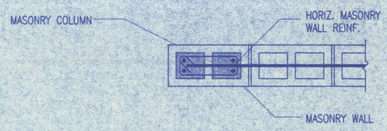

TYPICAL 8",10" x 16" MASONRY COLUMN — 5 / S3.2 (MC1-PL02)
NO SCALE

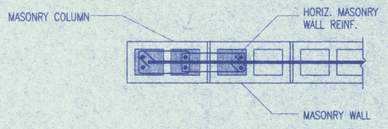

TYPICAL 8",10",12"x 24" MASONRY COLUMN — 6 / S3.2 (MC1-PL03)
NO SCALE

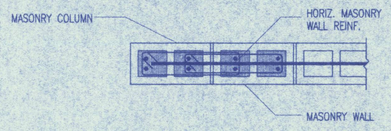

TYPICAL 8",10" x 32" MASONRY COLUMN — 7 / S3.2 (MC1-PL04)
NO SCALE

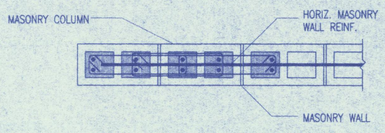

TYPICAL 8",10",12" x 40" MASONRY COLUMN — 8 / S3.2 (MC1-PL05)
NO SCALE

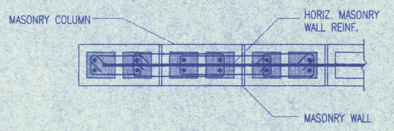

TYPICAL 8",10,12" x 48" MASONRY COLUMN — 9 / S3.2 (MC1-PL06)
NO SCALE

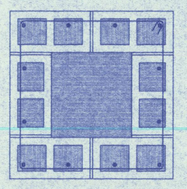

MC-11 — 10 / S3.2 (MC1-1/11)
NO SCALE

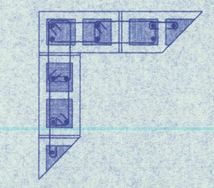

MC-16 — 11 / S3.2 (MC1-1/12)
NO SCALE

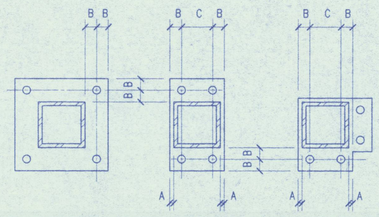

TYPE BP-1 TYPE BP-2 TYPE BP-3

TYPICAL STEEL BASE PLATES - PLAN VIEW — 2 / S3.2 (SBP-1)
NO SCALE

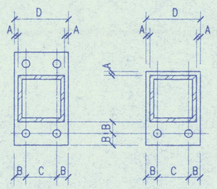

TYPE CP-1 TYPE CP-2

TYPICAL STEEL CAP PLATES - REFLECTED PLAN VIEW — 3 / S3.2 (SCP-1)
NO SCALE

STEEL COLUMN SCHEDULE

SC-1

MARK	SIZE	STEEL BASE PLATE	STEEL CAP PLATE	REMARKS
SC-1	TS4x4x3/16	3/4" TYPE BP-1	1/2" CP-1	
SC-2	TS4x4x3/8	3/4" TYPE BP-1	1/2" CP-1	
SC-3	TS3x3x1/4	9"x3/4"x4" W/4-3/4" DIA. x 6" LONG HSA	9"x1/2"x4"	SEE DETAIL 3/S5.2
SC-4	TS4x4x1/2	3/4" TYPE BP-1	1/2" CP-1	
SC-5	TS4x4x5/16	3/4" TYPE BP-1	1/2" CP-1	
SC-6	TS4x4x1/4	3/4" TYPE BP-1	1/2" CP-1	
SC-7	TS6x4x3/8	3/4" TYPE BP-1	1/2" CP-1	
SC-8	TS6x6x1/2	3/4" TYPE BP-1	1/2" CP-1	
SC-9	TS8x4x1/2	3/4" TYPE BP-1	1/2" CP-1	
SC-10	TS6x6x1/4	3/4" TYPE BP-1	1/2" CP-1	

NOTES:

1. UNLESS NOTED OTHERWISE, ALL COLUMNS SHALL BE INSTALLED W/4-3/4" DIAMETER A.B. W/3" (MIN) HOOKS. PROJECT ANCHOR BOLTS 1" (MIN) ABOVE THE TOP OF THE BASE PLATE, EMBEDMENT SHALL BE 9" (MIN). ALL BOLTS SHALL BE INSTALLED W/ 5/16" (MIN) PLATE WASHERS BENEATH THE NUT.
2. ALL BOLTS IN CAP PLATES SHALL BE 3/4" DIA, A325N BOLTS TYPICAL U.N.O.

CERTIFIED STRUCTURAL ENGINEERING NO. 171026 DGN. W. BARKER UTAH

REVISIONS

NO.	DATE	EXPLANATION	DRAWN

DRAWN BY: C.E.B. CHECKED BY: S.L.K.

THE NEW
ALICE C. HARRIS
INTERMEDIATE SCHOOL
LOCATED N
TREMONTON, UTAH 84337

DR NORTH ARCHITECTS
175 West 200 South Suite 1000
Salt Lake City, Utah 84101
Tel 801 355-5959
Fax 801 355-5960
A PROFESSIONAL CORPORATION

REAVELEY ENGINEERS & ASSOCIATES INC.
155 SOUTH 900 EAST
SALT LAKE CITY, UTAH
84105-2484
(801) 486-3883
FAX (801) 485-0381

LICENSED CERTIFIED STRUCTURAL ENGINEER
NO. 171026
DON W. BARKER
UTAH

REVISIONS

NO.	DATE	EXPLANATION	DRAWN

DRAWN BY: C.E.B. CHECKED BY: S.L.K.

MASONRY LINTEL SCHEDULE

ML-1

MARK	LINTEL DEPTH	LINTEL WIDTH	MASONRY TYPE	LINTEL HORIZONTAL	LINTEL STIRRUPS	MAXIMUM SPAN	REMARKS
ML-1	8"	6",8",10" OR 12"	BRICK OR CMU	1- #7 CONT.	------	3'-4"	
ML-2	16"	6",8",10" OR 12"	BRICK OR CMU	1- #7 CONT. TOP & BOT.	#3 AT 8" O.C.	5'-4"	
ML-3	24"	6",8",10" OR 12"	BRICK OR CMU	1- #7 CONT. TOP & BOT.	#3 AT 8" O.C.	8'-0"	
ML-4	32"	6",8",10" OR 12"	BRICK OR CMU	1- #7 CONT. TOP & BOT.	#3 AT 8" O.C.	10'-0"	
ML-5	56"	8",10"	CMU	2- #8 CONT. TOP & BOT.	#3 AT 8" O.C.		
ML-6	40"	8",10"	CMU	1- #7 CONT. TOP & BOT.	#3 AT 8" O.C.		
ML-7	56"	8",10"	CMU	1- #7 CONT. TOP & BOT.	#3 AT 8" O.C.		
ML-8	48"	8",10" OR 12"	CMU	1- #7 CONT. TOP & BOT.	#3 AT 8" O.C.		
ML-9	56"	8",10"	CMU	2- #7 CONT. TOP & BOT.	#3 AT 8" O.C.		
ML-10	64"	8",10" OR 12"	CMU	2- #7 CONT. TOP & BOT.	#3 AT 8" O.C.		
ML-11	40"	8",10" OR 12"	CMU	2- #8 CONT. TOP & BOT.	#3 AT 8" O.C.		

NOTES:

1. MASONRY LINTELS ML-1 THROUGH ML-4 SHALL BE USED OVER OPENINGS IN MASONRY WALLS WHEN A SPECIFIC MASONRY LINTEL IS NOT OTHERWISE SPECIFIED. THE MASONRY LINTEL TO BE USED SHALL BE DETERMINED BY THE MAXIMUM SPAN AS SPECIFIED IN THIS SCHEDULE. WHEN A SPECIFIC MASONRY LINTEL IS CALLED OUT ON THE PLAN, THE MAXIMUM SPAN AS NOTED IN THIS SCHEDULE SHALL NOT APPLY.
2. MASONRY LINTELS ML-1 THOUGH ML-4 SHALL NOT BE LOCATED BELOW ANY FLOOR, OR ROOF BEAM, OR GIRDER, OR ANY OTHER CONCENTRATED LOAD UNLESS SHOWN SPECIFICALLY ON THE PLAN SHEET. JOISTS SHALL NOT BEAR ON ANY LINTEL LESS THAN 16" DEEP.
3. FOR MASONRY LINTELS NOT SHOWN ON THE DRAWINGS THAT CARRY ANY FLOOR, OR ROOF BEAM, OR GIRDER, OR ANY OTHER CONCENTRATED LOAD, OR THAT SPAN GREATER THAN 10'-0" CONSULT THE STRUCTURAL ENGINEER.
4. EXTEND ALL HORIZONTAL REINFORCING 48 BAR DIAMETERS BEYOND THE EDGE OF THE OPENING. IF HORIZONTAL REINFORCING CANNOT BE EXTENDED 48 BAR DIAMETERS BEYOND THE EDGE OF THE OPENING, PROVIDE 90 DEGREE STANDARD HOOK.
5. ~~CHOUT EACH MASONRY LINTEL MONOLITHICALLY.~~
6. SPLICE TOP BARS AT MIDSPAN OF LINTEL ONLY.
7. SPLICE BOTTOM BARS OVER SUPPORTS ONLY.
8. FOR WALL ABOVE LINTEL, DOWEL VERTICAL REINFORCING INTO FULL DEPTH OF THE LINTEL OR 48 BAR DIAMETERS, WHICHEVER IS LESS.
9. HORIZONTAL WALL REINFORCING SHALL CONTINUE THROUGH MASONRY LINTELS. WHERE BOTH HORIZONTAL WALL REINFORCING AND LINTEL REINFORCING WOULD OCCUR IN THE SAME COURSE, THE LARGER BARS ARE TO REPLACE THE SMALLER BARS.

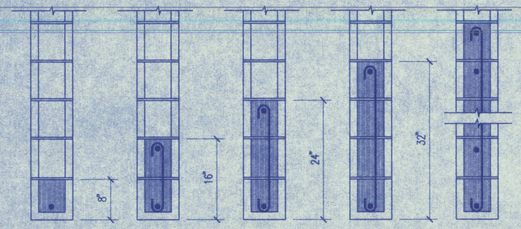

ML-1 ML-2 ML-3 ML-4 ML-5,9,10

TYPICAL MASONRY LINTEL DETAILS — 1 / S3.2 — ML-DET
NO SCALE

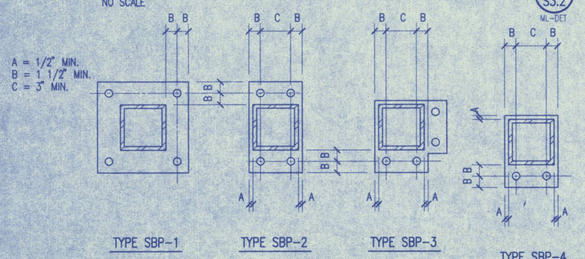

TYPE SBP-1 TYPE SBP-2 TYPE SBP-3 TYPE SBP-4

TYPICAL STEEL BASE PLATES – PLAN VIEW — 1 / S3.2 — SBP-1
NO SCALE

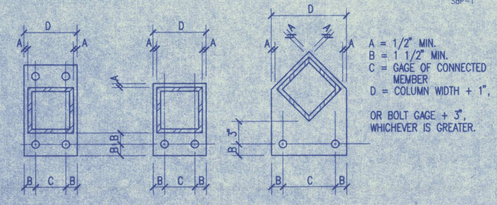

TYPE SCP-1 TYPE SCP-2 TYPE SCP-3

TYPICAL STEEL CAP PLATES – REFLECTED PLAN VIEW — 2 / S3.2 — SCP-1
NO SCALE

MASONRY COLUMN SCHEDULE

MC-1

MARK	SIZE	REINFORCING VERTICAL	REINFORCING TIES	REMARKS
MC-1	8x8	2-#5	#2 @ 8" O.C.	SEE DETAIL 4/S3.2
MC-2	8x16	4-#5	#2 @ 8" O.C.	SEE DETAIL 5/S3.2
MC-3	8x24	6-#5	2-#2 @ 8" O.C.	SEE DETAIL 6/S3.2
MC-4	8x24	6-#6	2-#2 @ 8" O.C.	SEE DETAIL 6/S3.2
MC-5	10x32	8-#6	2-#2 @ 8" O.C.	SEE DETAIL 7/S3.2
MC-6	12x24	6-#5	2-#2 @ 8" O.C.	SEE DETAIL 6/S3.2
MC-7	10x40	10-#6	3-#2 @ 8" O.C.	SEE DETAIL 8/S3.2
MC-8	10x24	6-#5	2-#2 @ 8" O.C.	SEE DETAIL 6/S3.2
MC-9	10x32	8-#5	2-#2 @ 8" O.C.	SEE DETAIL 7/S3.2
MC-10	8x32	8-#6	2-#2 @ 8" O.C.	SEE DETAIL 7/S3.2
MC-11	32x32	12-#6	#3 @ 8" O.C.	SEE DETAIL 10/S3.2
MC-12	8x32	8-#5	2-#2 @ 8" O.C.	SEE DETAIL 7/S3.2
MC-13	10x48	12-#5	3-#2 @ 8" O.C.	SEE DETAIL 9/S3.2
MC-14	8x32	8-#5	2-#2 @ 8" O.C.	SEE DETAIL 7/S3.2
MC-15	10x32	8-#5	2-#2 @ 8" O.C.	SEE DETAIL 7/S3.2
MC-16	8x32x32	12-#6	4-#2 @ 8" O.C.	SEE DETAIL 11/S3.2
MC-17	10x16	4-#5	#2 @ 8" O.C.	SEE DETAIL 5/S3.2
MC-18	8x40	10-#6	3-#2 @ 8" O.C.	SEE DETAIL 8/S3.2
MC-19	24x12x24	10-#7	4-#2 @ 8" O.C.	SEE DETAIL 12/S3.2
MC-20	12x48	12-#7	3-#2 @ 8" O.C.	SEE DETAIL 9/S3.2
MC-21	8x48	12-#6	3-#2 @ 8" O.C.	SEE DETAIL 9/S3.2
MC-22	8x16	4-#6	#2 @ 8" O.C.	SEE DETAIL 5/S3.2

NOTES:

1. THE CENTERLINE OF VERTICAL BARS SHALL BE LOCATED 2 1/2" FROM THE FACE OF THE MASONRY. HORIZONTAL BARS SHALL BE LOCATED TO THE INSIDE OF THE VERTICAL BARS.
2. UNLESS NOTED OTHERWISE, VERTICAL REINFORCING AND TIES SHALL EXTEND FULL HEIGHT OF THE WALL.
3. MASONRY COLUMN VERTICAL BARS OR DOWELS IN CONCRETE FOUNDATION WALLS SHALL BE TIED WITH #3 TIES AT 8" O.C.
4. ALL COLUMNS WHICH OCCUR IN WALLS THAT REQUIRE SPECIAL INSPECTION SHALL ALSO BE SPECIAL INSPECTED. IN ADDITION MC-12, MC-15, MC-21 AND MC-22 COLUMNS SHALL BE SPECIAL INSPECTED, AND ALL MC COLUMNS NOTED "SI" ON PLAN.

STEEL COLUMN SCHEDULE

SC-1

MARK	SIZE	STEEL BASE PLATE	STEEL CAP PLATE	REMARKS
SC-1	TS4x4x3/16	3/4" TYPE SBP-1	3/4" TYPE SCP-2	
SC-2	TS4x4x3/8	3/4" TYPE SBP-1	3/4" TYPE SCP-1	
SC-3	TS3x3x1/4	9"x3/4"x4" W/4-3/4" DIA. x 6" LONG HSA	9"x1/2"x4"	SEE DETAIL 3/S6.4
SC-4	TS4x4x1/2	3/4" TYPE SBP-1	3/4" TYPE SCP-2	
SC-5	TS4x4x5/16	3/4" TYPE SBP-1	3/4" TYPE SCP-1	
SC-6	TS4x4x3/16	3/4" TYPE SBP-1	3/4" TYPE SCP-1	
SC-7	TS6x4x3/8	1" TYPE SBP-1	3/4" TYPE SCP-3	SEE DETAIL 5/S6.3
SC-8	TS6x6x5/16	1" TYPE SBP-1	1" TYPE SCP-1 W/3-3/4" DIA. A325 BOLTS	SEE DETAIL 16/S6.3 & 17/S6.3
SC-9	TS8x4x1/2	1.1/8" SBP-1	1" TYPE SCP-1	
SC-10	TS6x6x1/4	3/4" TYPE SBP-1	1" TYPE SCP-1	
SC-11	TS5x5x1/4	3/4" TYPE SBP-3	3/4" TYPE SCP-2	
SC-12	TS4x4x3/16	3/4" TYPE SBP-4 W/2-3/4" DIA A325N BOLTS	3/4" TYPE SCP-3	SEE DETAIL 5/S6.3
SC-13	TS4x4x3/8	3/4" TYPE SBP-1	3/4" TYPE SCP-3	SEE DETAIL 5/S6.3
SC-14	TS4x4x3/8	3/4" TYPE SBP-3	3/4" TYPE SCP-1	
SC-15	TS4x4x5/16	3/4" TYPE SBP-1	7"x1"x11" W/2-5/8" DIA. x 12" DBA	
SC-16	TS4x4x3/8	3/4" TYPE SBP-2 W/4-3/4" DIA. A325N BOLTS	3/4" TYPE SCP-1	
SC-17	TS4x4x5/16	3/4" TYPE SBP-1	3/4" TYPE SCP-2	
SC-18	TS6x6x1/2	1.1/4" TYPE SBP-1	8"x1.1/4"x9.1/2"	
SC-19	TS4x4x5/16	3/4" TYPE SBP-1	3/4" TYPE SCP-3	SEE DETAIL 5/S6.3
SC-20	TS4x4x5/16	3/4" TYPE SBP-3	3/4" TYPE SCP-3	SEE DETAIL 5/S6.3
SC-21	TS4x4x3/8	3/4" TYPE SBP-2	3/4" TYPE SCP-1	
SC-22	TS6x6x1/4	3/4" TYPE SBP-2	10"x3/4"x16" W4-5/8" DIA. x 24" DBA	
SC-23	TS4x4x5/16	3/4" TYPE SBP-3	3/4" TYPE SCP-2	

NOTES:

1. UNLESS NOTED OTHERWISE, ALL COLUMNS SHALL BE INSTALLED W/4-3/4" DIAMETER A.B. W/3" (MIN) HOOKS. PROJECT ANCHOR BOLTS 1" (MIN) ABOVE THE TOP OF THE BASE PLATE. EMBEDMENT SHALL BE 9" (MIN). ALL BOLTS SHALL BE INSTALLED W/ 5/16" (MIN) PLATE WASHERS BENEATH THE NUT.
2. ALL BOLTS IN CAP PLATES SHALL BE 3/4" DIA, A325N BOLTS TYPICAL U.N.O.

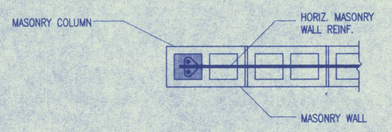

TYPICAL 8" x 8" MASONRY COLUMN — 4 / S3.2 — MC1-PL01
NO SCALE

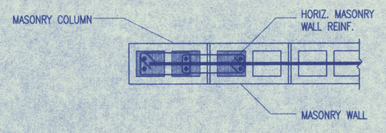

TYPICAL 8",10",12" x 24" MASONRY COLUMN — 6 / S3.2 — MC1-PL03
NO SCALE

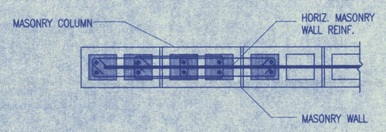

TYPICAL 8",10",12" x 40" MASONRY COLUMN — 8 / S3.2 — MC1-PL05
NO SCALE

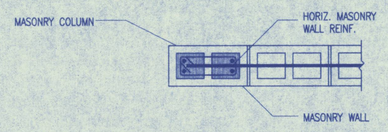

TYPICAL 8",10" x 16" MASONRY COLUMN — 5 / S3.2 — MC1-PL02
NO SCALE

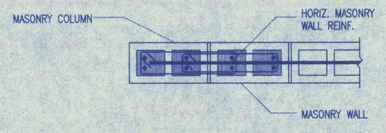

TYPICAL 8",10" x 32" MASONRY COLUMN — 7 / S3.2 — MC1-PL04
NO SCALE

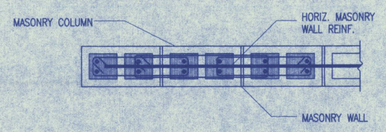

TYPICAL 8",10,12" x 48" MASONRY COLUMN — 9 / S3.2 — MC1-PL06
NO SCALE

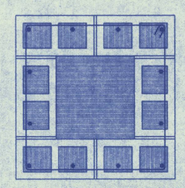

MC-11 — 10 / S3.2 — IM03-1/11
NO SCALE

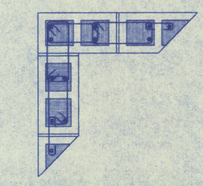

MC-16 — 11 / S3.2 — IM03-1/12
NO SCALE

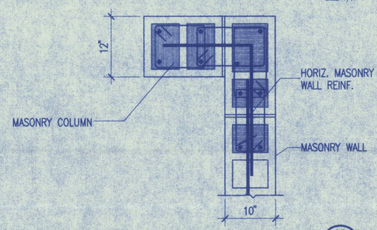

MC-19 — 12 / S3.2 — IM03-1/11
NO SCALE

THE NEW
ALICE C. HARRIS
INTERMEDIATE SCHOOL
LOCATED IN
TREMONTON, UTAH 84337

NAYLOR WENTWORTH ARCHITECTS
175 West 200 South
Suite 1000
Salt Lake City, Utah 84101
Tel 801 355-5959
Fax 801 355-5980
A PROFESSIONAL CORPORATION

S3.2

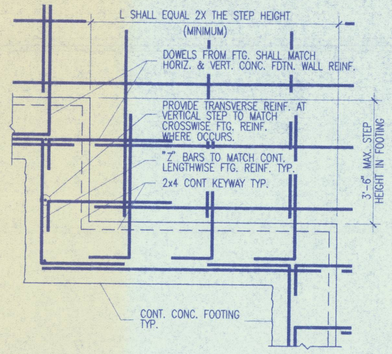

TYPICAL STEP FOOTING DETAIL
NO SCALE
1 S4.1 CF-TYP01

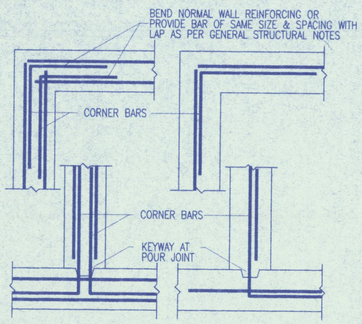

TYPICAL WALL CORNERS & INTERSECTION PLAN
NO SCALE
2 S4.1 CF-TYP02

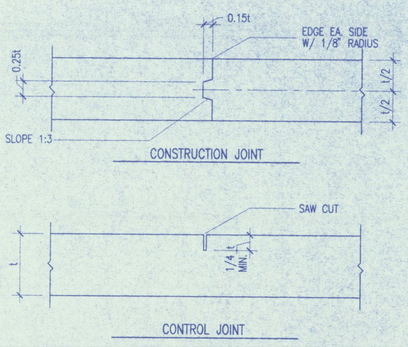

TYPICAL SLAB JOINTS
NO SCALE
3 S4.1 CF-TYP03

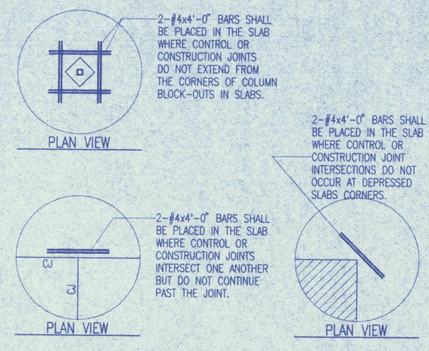

TYPICAL SLAB REINFORCING DISCONTINUOUS SLAB JOINTS
NO SCALE
4 S4.1 CF-TYP10

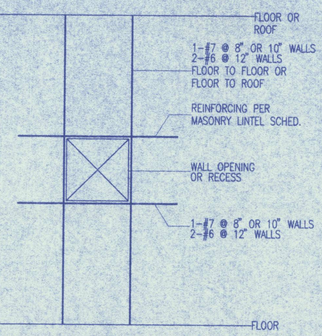

TYPICAL REINFORCING AROUND MISCELLANEOUS OR RECESSED MASONRY OPENINGS
NO SCALE
5 S4.1 CF-TYP13

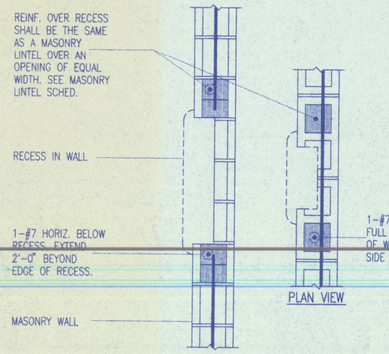

TYPICAL RECESS IN MASONRY WALL
NO SCALE
6 S4.1 CF-TYP07

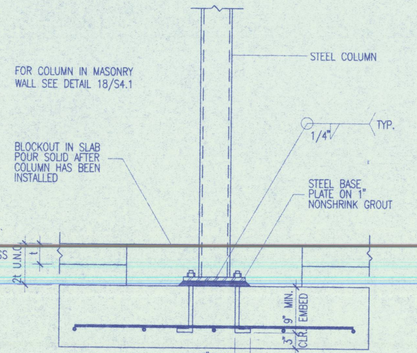

TYPICAL COLUMN BASE
NO SCALE
7 S4.1 CF-TYP05

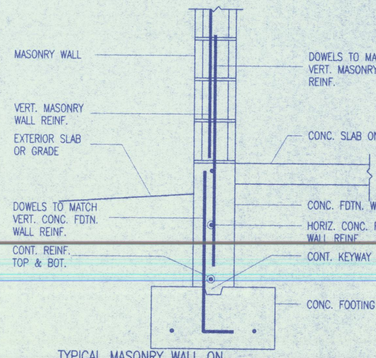

TYPICAL MASONRY WALL ON CONCRETE FOUNDATION WALL
NO SCALE
8 S4.1 MAT-CF-W01

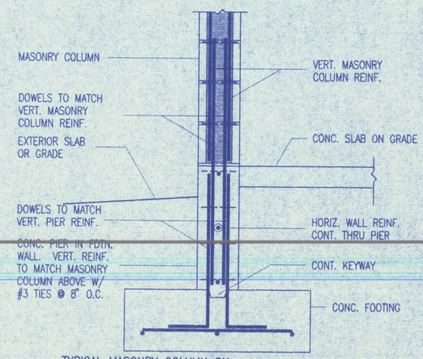

TYPICAL MASONRY COLUMN ON CONCRETE PIER IN FOUNDATION WAL
NO SCALE
9 S4.1 MAT-CF-W02

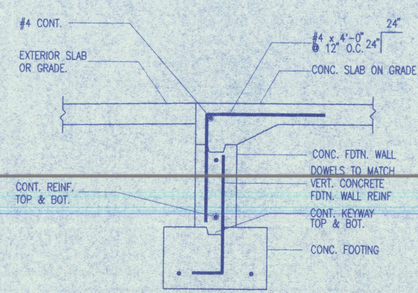

TYPICAL CONCRETE SLAB TO FOUNDATION WALL AT DOOR OPENING
NO SCALE
10 S4.1 CMT-CF-15

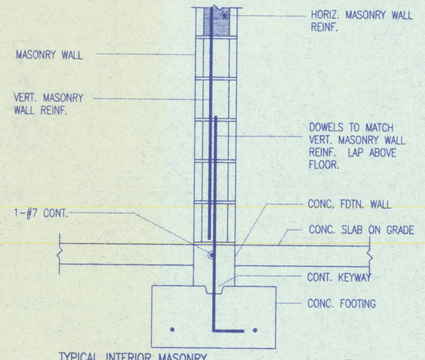

TYPICAL INTERIOR MASONRY WALL ON CONCRETE CURB WALL
NO SCALE
11 S4.1 MAT-CF-W05

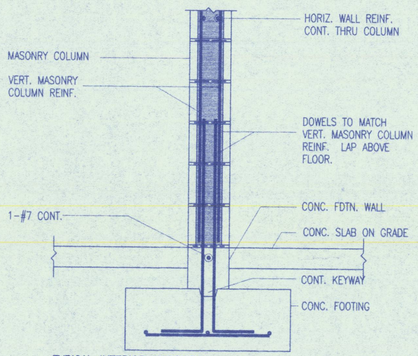

TYPICAL INTERIOR MASONRY COLUMN ON CONCRETE CURB
NO SCALE
12 S4.1 MAT-CF-W07

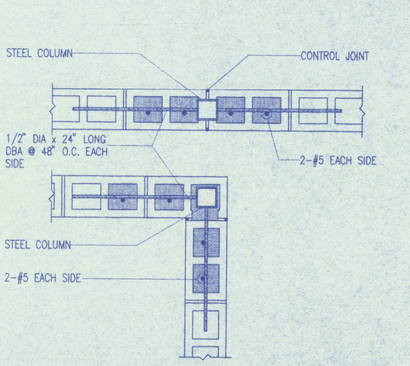

TYPICAL DOOR OPENING AT INTERIOR
NO SCALE
13 S4.1 BNS4-1_13

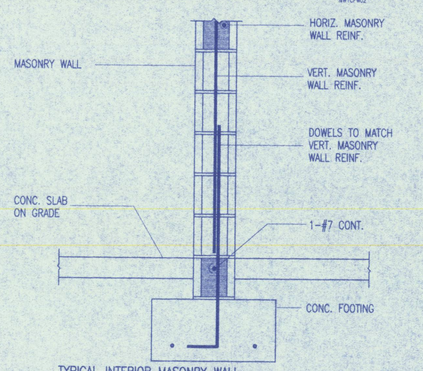

TYPICAL INTERIOR MASONRY WALL AT MASONRY FOUNDATION WALL (ALTERNATE)
NO SCALE
14 S4.1 MAT-MF-W07

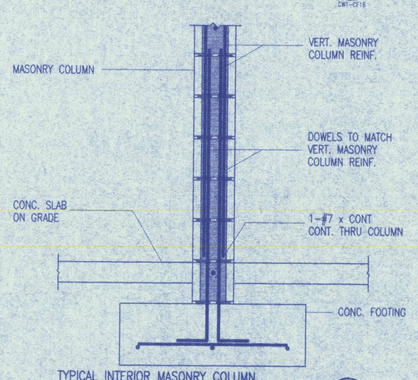

TYPICAL INTERIOR MASONRY COLUMN AT MASONRY FOUNDATION WALL (ALTERNATE)
NO SCALE
15 S4.1 MAT-MF-W08

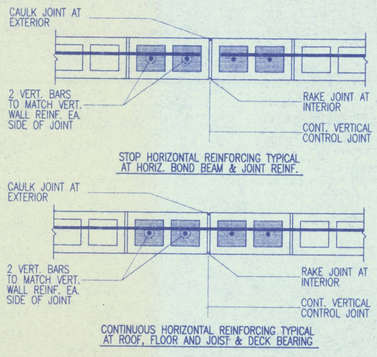

TYPICAL CONTROL JOINTS IN 8" MASONRY WALLS
NO SCALE
16 S4.1 CF-TYP06

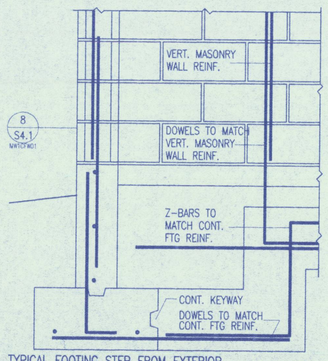

TYPICAL FOOTING STEP FROM EXTERIOR FDTN WALL TO INTERIOR WALL
NO SCALE
17 S4.1 MAT-CF-W11

TYPICAL STEEL COLUMNS IN MASONRY WALLS - PLAN VIEWS
NO SCALE
18 S4.1 BNS4-1_18

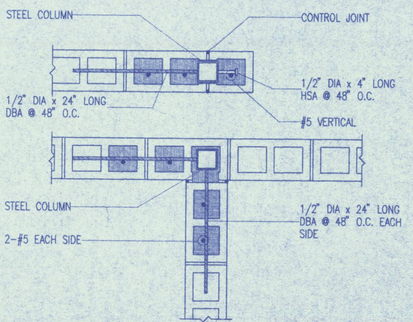

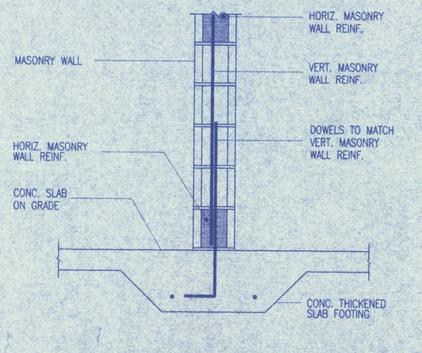

TYPICAL INTERIOR MASONRY WALL AT THICKENED SLAB
NO SCALE
19 S4.1 MAT-MF-W09

CERTIFIED STRUCTURAL ENGINEER
NO. 171026
DON W. BARKER
UTAH

REVISIONS

NO.	DATE	EXPLANATION	DRAWN

DRAWN BY: C.E.B. CHECKED BY: S.L.K.

THE NEW
ALICE C. HARRIS
INTERMEDIATE SCHOOL
LOCATED IN
TREMONTON, UTAH 84337

FISHER WORTH ARCHITECTS
175 West 200 South Suite 1000
Salt Lake City, Utah 84101
Tel 801 355-5959
Fax 801 355-5960
A PROFESSIONAL CORPORATION

REAVELEY ENGINEERS & ASSOCIATES INC.
195 SOUTH 1100 EAST
SALT LAKE CITY, UTAH
84105-2424
(800) 466-3663
FAX (800) 495-0911

LICENSED CERTIFIED STRUCTURAL ENGINEER
NO. 171026
DON W. BARKER
UTAH

REVISIONS

NO.	DATE	DESCRIPTION	DRAWN

DRAWN BY: C.E.G. CHECKED BY: S.L.K.

THE NEW
ALICE C. HARRIS INTERMEDIATE SCHOOL
LOCATED IN
TREMONTON, UTAH 84337

NAYLOR WENTWORTH ARCHITECTS
175 West 200 South
Suite 1000
Salt Lake City, Utah 84101
Tel 801 355-5959
Fax 801 355-5980
A PROFESSIONAL CORPORATION

S4.1

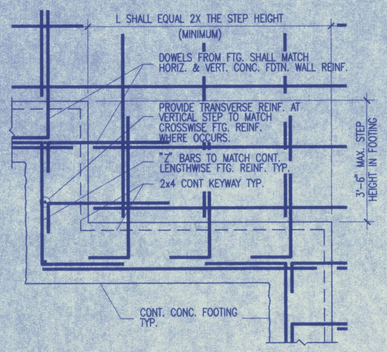

TYPICAL STEP FOOTING DETAIL
NO SCALE
1 S4.1 CF-TYP01

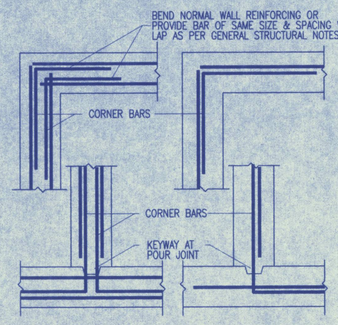

TYPICAL WALL CORNERS & INTERSECTION PLAN
NO SCALE
2 S4.1 CF-TYP02

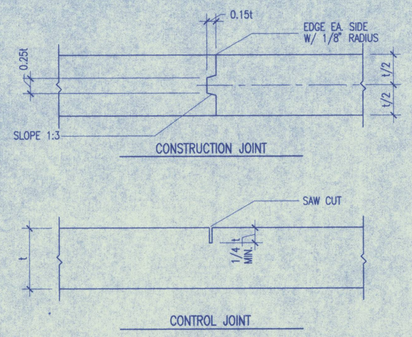

TYPICAL SLAB JOINTS
NO SCALE
3 S4.1 CF-TYP03

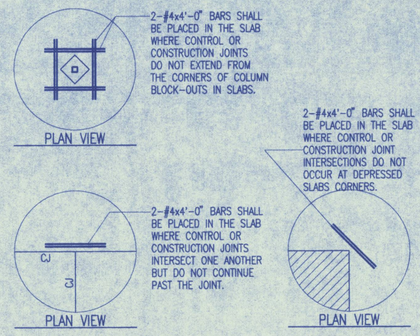

TYPICAL SLAB REINFORCING
DISCONTINUOUS SLAB JOINTS
NO SCALE
4 S4.1 CF-TYP10

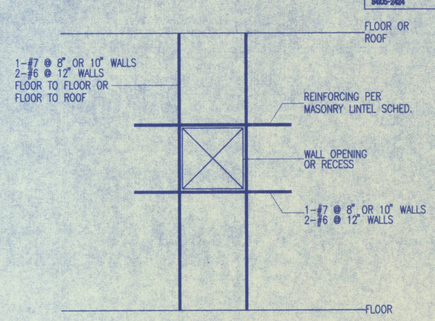

TYPICAL REINFORCING AROUND MISCELLANEOUS
OR RECESSED MASONRY OPENINGS
NO SCALE
5 S4.1 3204-541/05

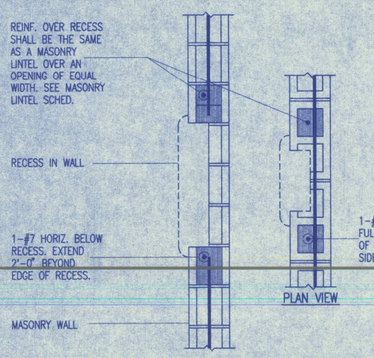

TYPICAL RECESS IN MASONRY WALL
NO SCALE
6 S4.1 CF-TYP07

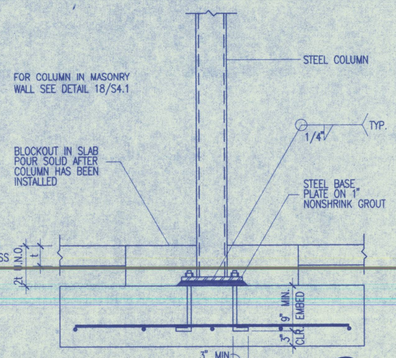

TYPICAL COLUMN BASE
NO SCALE
7 S4.1 CF-TYP05

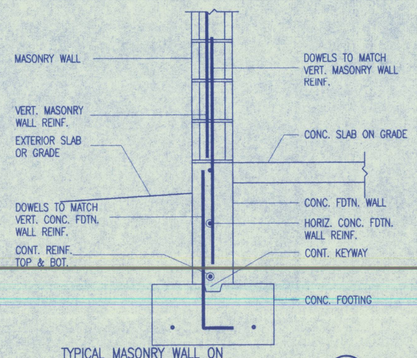

TYPICAL MASONRY WALL ON
CONCRETE FOUNDATION WALL
NO SCALE
8 S4.1 MWTCFW01

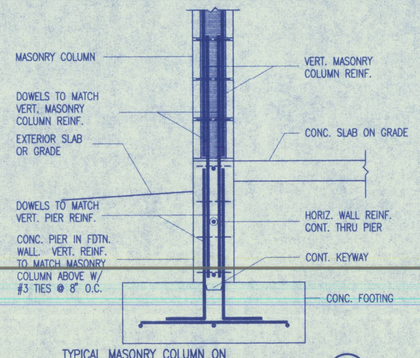

TYPICAL MASONRY COLUMN ON
CONCRETE PIER IN FOUNDATION WAL
NO SCALE
9 S4.1 MWTCFW02

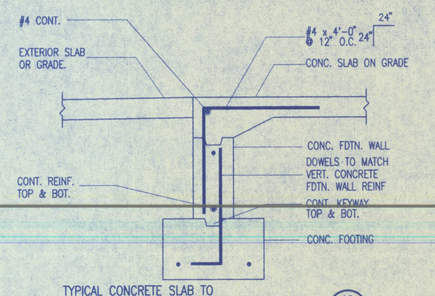

TYPICAL CONCRETE SLAB TO
FOUNDATION WALL AT DOOR OPENING
NO SCALE
10 S4.1 CWT-DT16

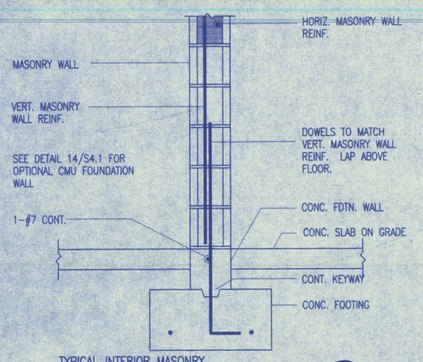

TYPICAL INTERIOR MASONRY
WALL ON CONCRETE CURB WALL
NO SCALE
11 S4.1 MWHCFW05

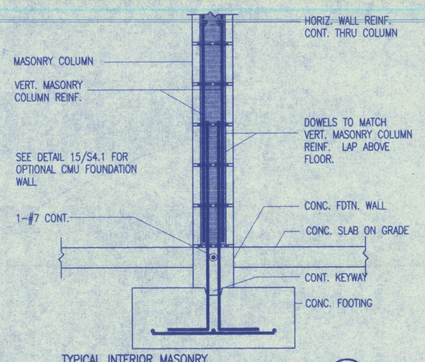

TYPICAL INTERIOR MASONRY
COLUMN ON CONCRETE CURB
NO SCALE
12 S4.1 MWHCFW07

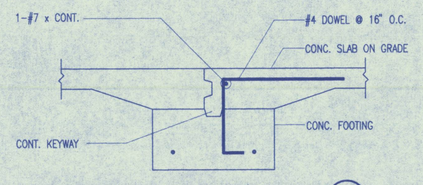

TYPICAL DOOR OPENING AT INTERIOR
NO SCALE
13 S4.1 3204-541/13

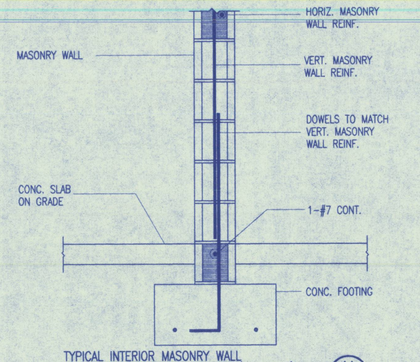

TYPICAL INTERIOR MASONRY WALL
AT MASONRY FOUNDATION WALL (OPTIONAL)
NO SCALE
14 S4.1 MWTMFW07

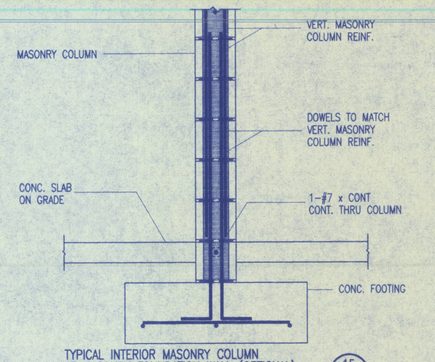

TYPICAL INTERIOR MASONRY COLUMN
AT MASONRY FOUNDATION WALL (OPTIONAL)
NO SCALE
15 S4.1 MWTMFW08

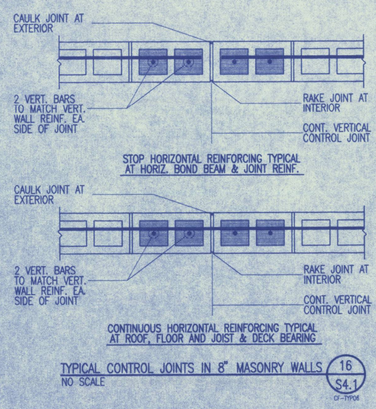

TYPICAL CONTROL JOINTS IN 8" MASONRY WALLS
NO SCALE
16 S4.1 CF-TYP08

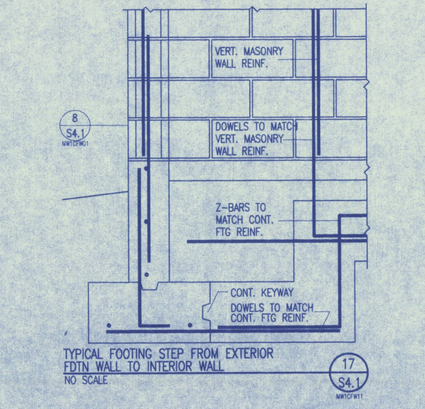

TYPICAL FOOTING STEP FROM EXTERIOR
FDTN WALL TO INTERIOR WALL
NO SCALE
17 S4.1 MWTCFW11

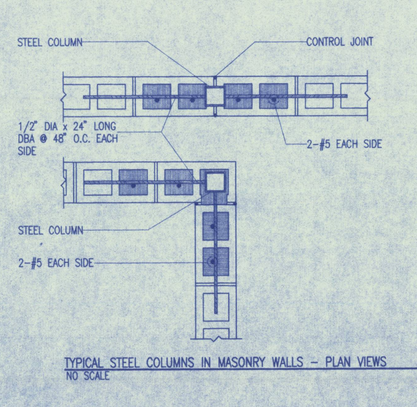

TYPICAL STEEL COLUMNS IN MASONRY WALLS – PLAN VIEWS
NO SCALE
18 S4.1 3204-541/18

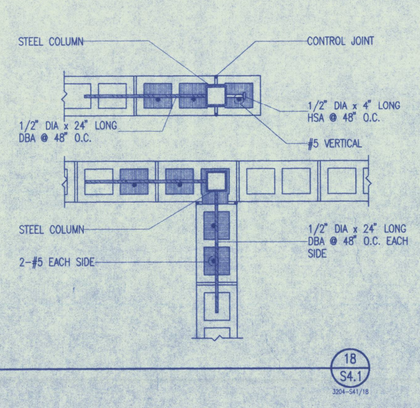

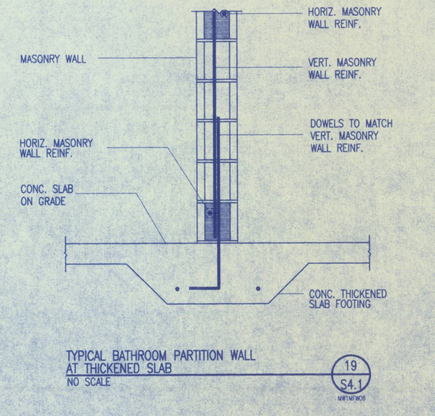

TYPICAL BATHROOM PARTITION WALL
AT THICKENED SLAB
NO SCALE
19 S4.1 MWTMFW09

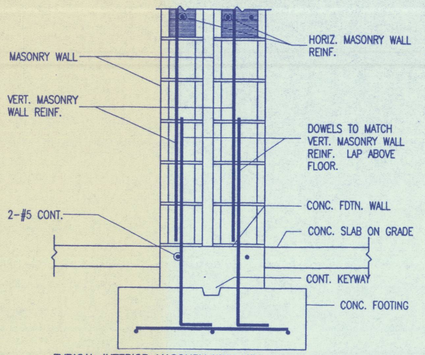

TYPICAL INTERIOR MASONRY WALL AT EXPANSION JOINT ON CONCRETE CURB WALL
NO SCALE — 1 / S4.2 — BNS4-2/01

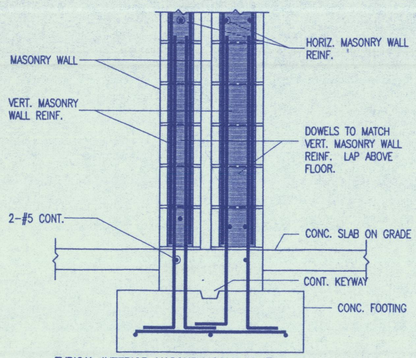

TYPICAL INTERIOR MASONRY COLUMN AT EXPANSION JOINT ON CONCRETE CURB WALL
NO SCALE — 2 / S4.2 — BNS4-2/02

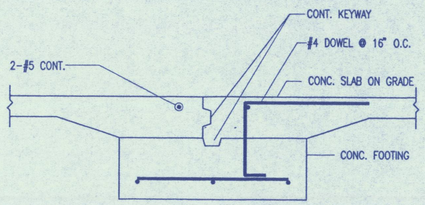

TYPICAL DOOR OPENING AT EXPANSION JOINT
NO SCALE — 3 / S4.2 — BNS4-2/02

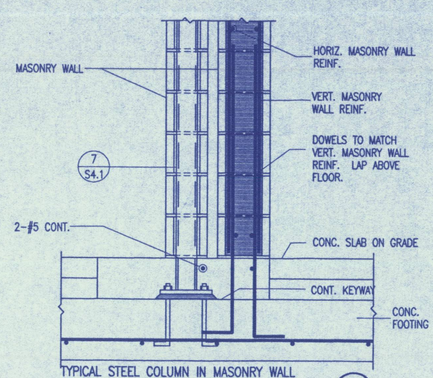

TYPICAL STEEL COLUMN IN MASONRY WALL AT EXPANSION JOINT
NO SCALE — 4 / S4.2 — BNS4-2/04

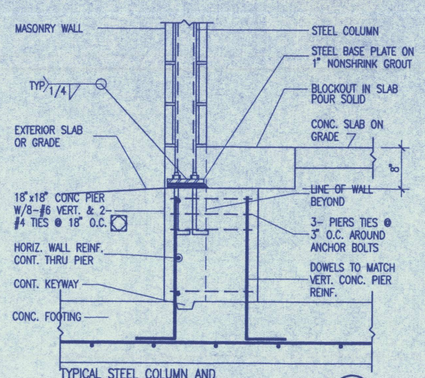

TYPICAL STEEL COLUMN AND MASONRY WALL IN FOUNDATION WALL
NO SCALE — 5 / S4.2 — BNS4-2/05

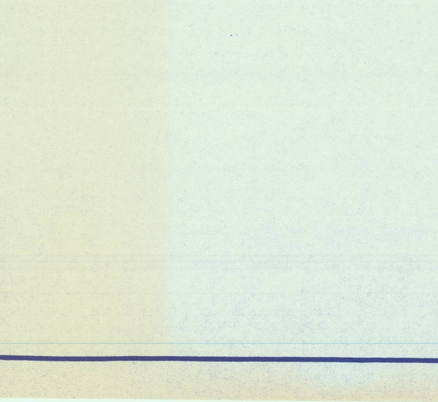

TYPICAL STEEL COLUMN AND MASONRY WALL IN FOUNDATION WALL
NO SCALE — 6 / S4.2 — BNS4-2/06

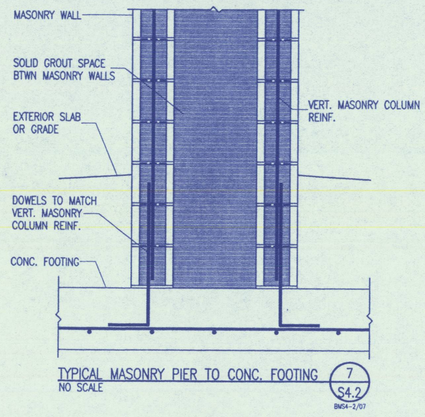

TYPICAL MASONRY PIER TO CONC. FOOTING
NO SCALE — 7 / S4.2 — BNS4-2/07

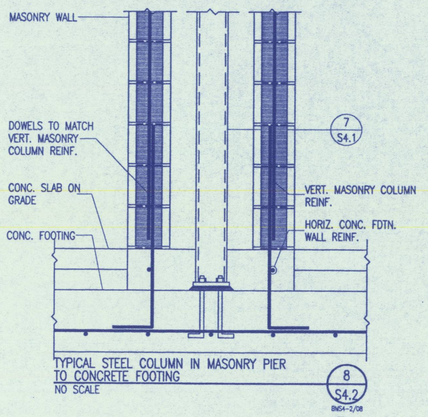

TYPICAL STEEL COLUMN IN MASONRY PIER TO CONCRETE FOOTING
NO SCALE — 8 / S4.2 — BNS4-2/08

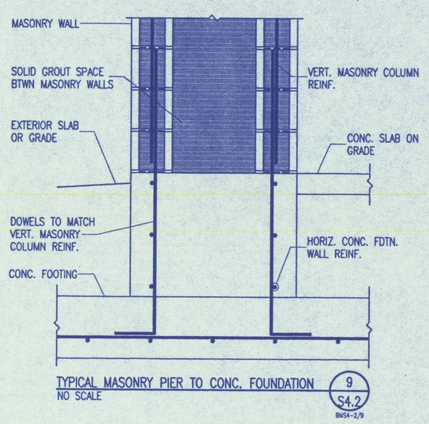

TYPICAL MASONRY PIER TO CONC. FOUNDATION
NO SCALE — 9 / S4.2 — BNS4-2/9

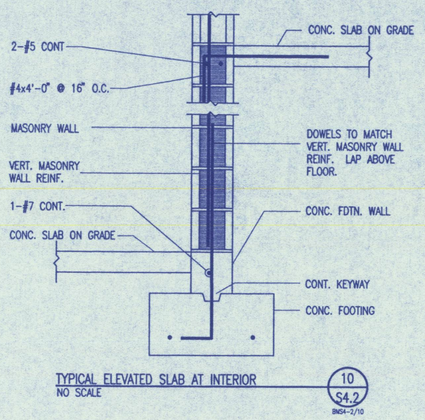

TYPICAL ELEVATED SLAB AT INTERIOR
NO SCALE — 10 / S4.2 — BNS4-2/10

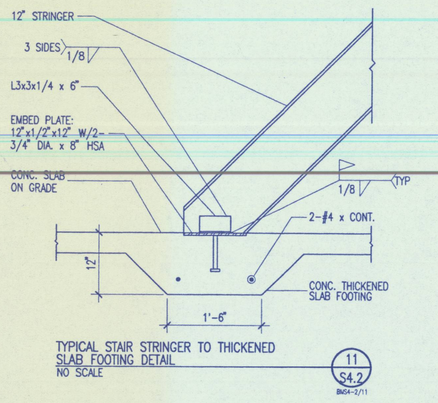

TYPICAL STAIR STRINGER TO THICKENED SLAB FOOTING DETAIL
NO SCALE — 11 / S4.2 — BNS4-2/11

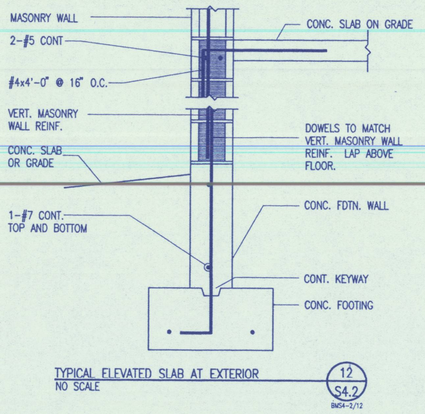

TYPICAL ELEVATED SLAB AT EXTERIOR
NO SCALE — 12 / S4.2 — BNS4-2/12

CERTIFIED STRUCTURAL ENGINEER
NO. 171026
DON W. BARKER
UTAH

REVISIONS

NO.	DATE	EXPLANATION	DRAWN

DRAWN BY: C.E.B. CHECKED BY: S.L.K.

THE NEW
ALICE C. HARRIS
INTERMEDIATE SCHOOL
LOCATED IN
TREMONTON, UTAH 84337

175 West 200 South
Suite 1010
Salt Lake City, Utah 84101
Tel 801 355-5959
Fax 801 355-5910
A PROFESSIONAL CORPORATION

NAYLOR
HOWORTH
ARCHITECTS

REAVELEY ENGINEERS & ASSOCIATES INC.
155 SOUTH 900 EAST
SALT LAKE CITY, UTAH
84102-2424
(801) 486-2888
FAX (801) 485-0918

LICENSED CERTIFIED STRUCTURAL ENGINEER
NO. 171026
DON W. BARKER
UTAH

REVISIONS

NO.	DATE	EXPLANATION	DRAWN BY: C.E.B.	CHECKED BY: S.L.K.
			BRWN	

THE NEW
ALICE C. HARRIS
INTERMEDIATE SCHOOL
LOCATED IN
TREMONTON, UTAH 84337

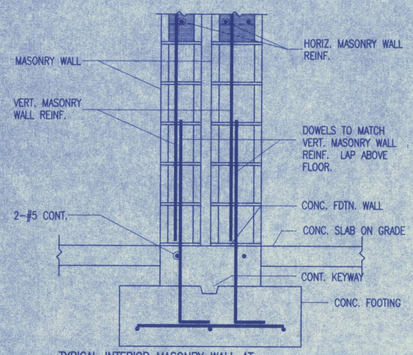

TYPICAL INTERIOR MASONRY WALL AT EXPANSION JOINT ON CONCRETE CURB WALL
NO SCALE — 1 / S4.2 — 3204-542/01

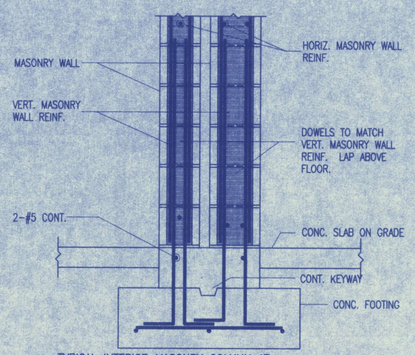

TYPICAL INTERIOR MASONRY COLUMN AT EXPANSION JOINT ON CONCRETE CURB WALL
NO SCALE — 2 / S4.2 — 3204-542/02

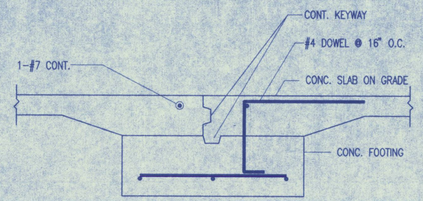

TYPICAL DOOR OPENING AT EXPANSION JOINT
NO SCALE — 3 / S4.2 — 3204-542/03

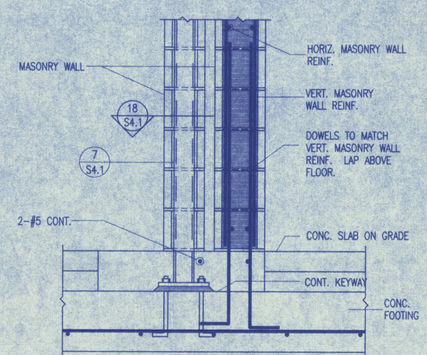

TYPICAL STEEL COLUMN IN MASONRY WALL AT EXPANSION JOINT
NO SCALE — 4 / S4.2 — 3204-542/04

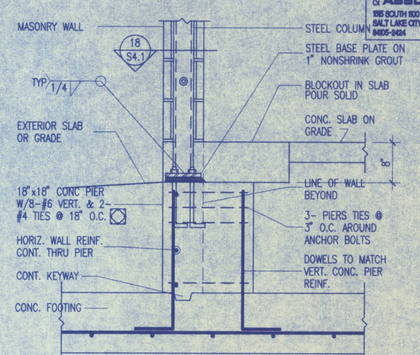

TYPICAL STEEL COLUMN AND MASONRY WALL IN FOUNDATION WALL
NO SCALE — 5 / S4.2 — 3204-542/05

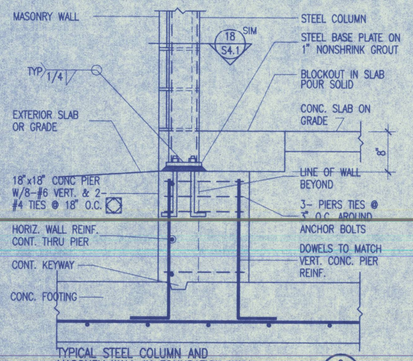

TYPICAL STEEL COLUMN AND MASONRY WALL IN FOUNDATION WALL
NO SCALE — 6 / S4.2 — 3204-542/06

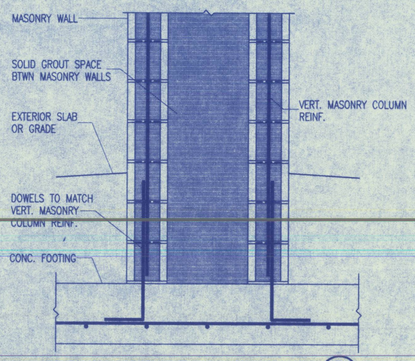

TYPICAL MASONRY PIER TO CONC. FOOTING
NO SCALE — 7 / S4.2 — 3204-542/07

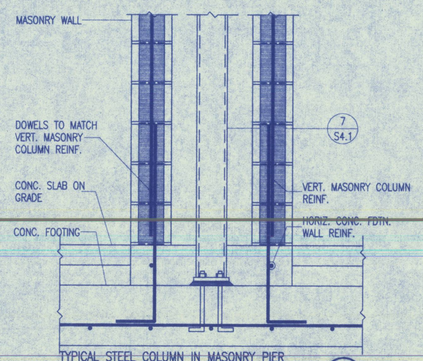

TYPICAL STEEL COLUMN IN MASONRY PIER TO CONCRETE FOOTING
NO SCALE — 8 / S4.2 — 3204-542/08

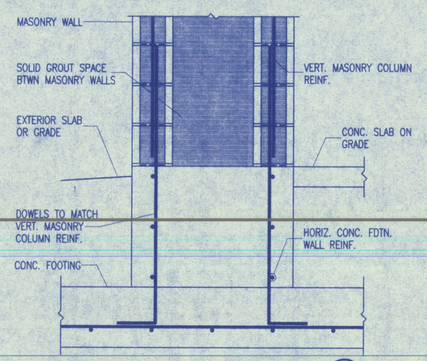

TYPICAL MASONRY PIER TO CONC. FOUNDATION
NO SCALE — 9 / S4.2 — 3204-542/09

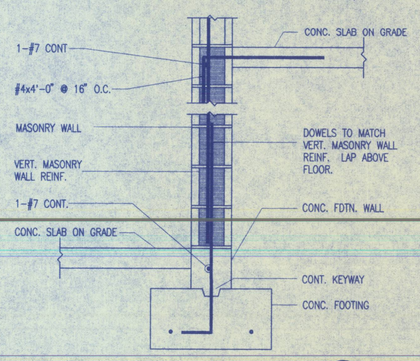

TYPICAL ELEVATED SLAB AT INTERIOR
NO SCALE — 10 / S4.2 — 3204-542/10

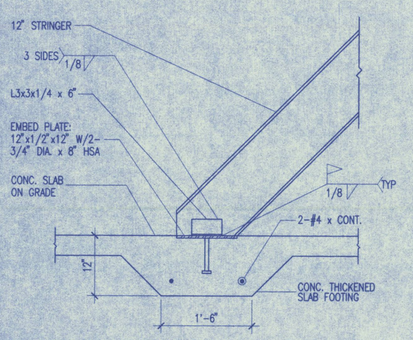

TYPICAL STAIR STRINGER TO THICKENED SLAB FOOTING DETAIL
NO SCALE — 11 / S4.2 — 3204-542/11

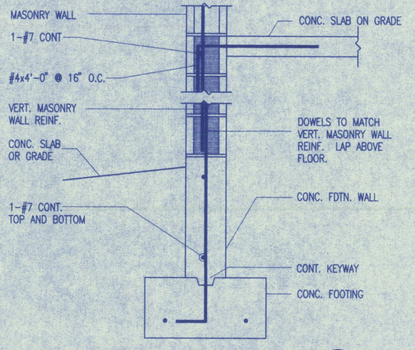

TYPICAL ELEVATED SLAB AT EXTERIOR
NO SCALE — 12 / S4.2 — 3204-542/12

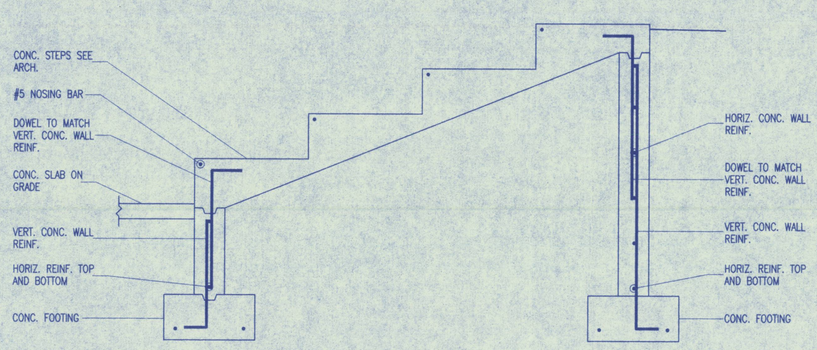

CONCRETE STAIRS AT EXTERIOR COURTYARD
NO SCALE — 13 / S4.2 — 3204-542/13

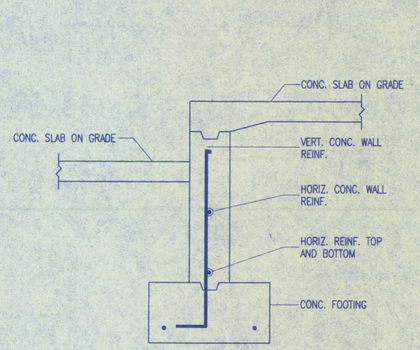

CONCRETE SLAB AT EXTERIOR COURTYARD
NO SCALE — 14 / S4.2 — 3204-542/14

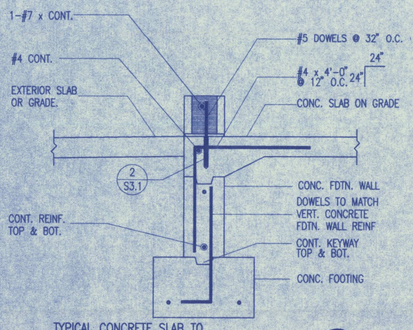

TYPICAL CONCRETE SLAB TO FOUNDATION WALL AT DOOR OPENING
NO SCALE — 15 / S4.2 — 3204-542/15

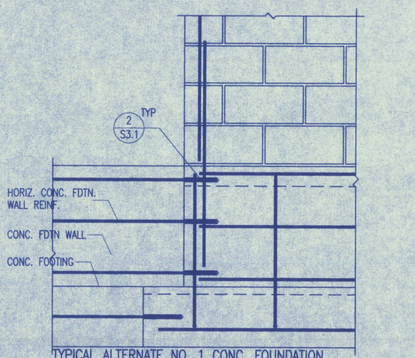

TYPICAL ALTERNATE NO. 1 CONC. FOUNDATION WALL TO CONC. FOUNDATION WALL
NO SCALE — 16 / S4.2 — 3204-542/16

NAYLOR WENTWORTH ARCHITECTS
175 West 200 South
Suite 1000
Salt Lake City, Utah 84101
Tel 801 355-5959
Fax 801 355-5960
A PROFESSIONAL CORPORATION

S4.2

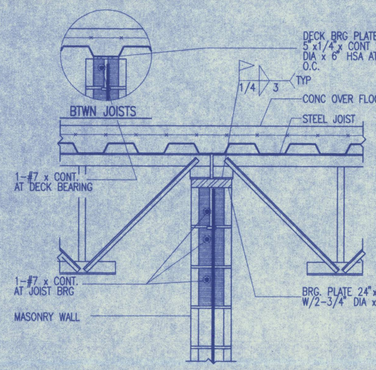

TYP JOIST/DECK BEARING AT MASONRY WALL
NO SCALE
1 S5.1
3204-551/01

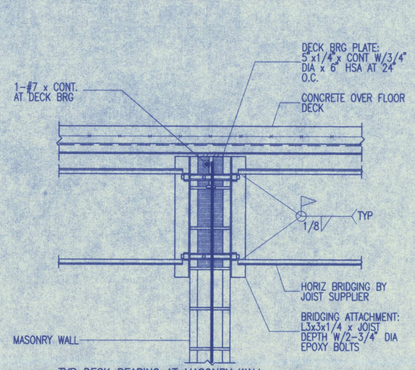

TYP DECK BEARING AT MASONRY WALL WITH BRIDGING ATTACHMENT
NO SCALE
2 S5.1
32-4-551/02

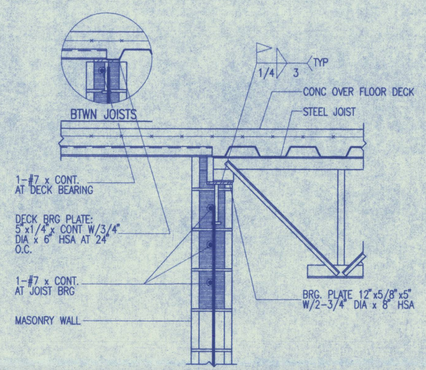

TYP JOIST/DECK BEARING AT MASONRY WALL
NO SCALE
3 S5.1
3204-551/03

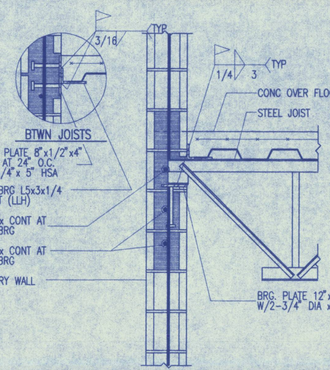

TYP JOIST/DECK BEARING AT MASONRY WALL
NO SCALE
4 S5.1
3204-551/04

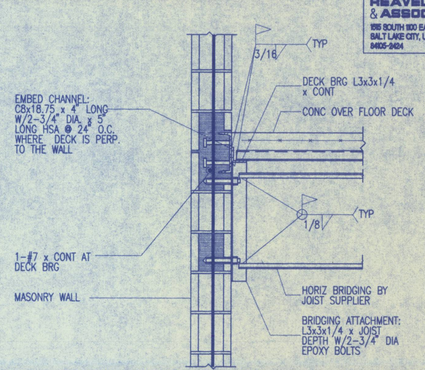

TYP DECK BEARING AT MASONRY WALL WITH BRIDGING ATTACHMENT
NO SCALE
5 S5.1
3204-551/05

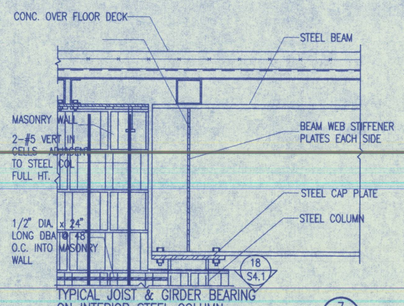

TYPICAL JOIST & GIRDER BEARING ON INTERIOR STEEL COLUMN
NO SCALE
7 S5.1
3204-551/07

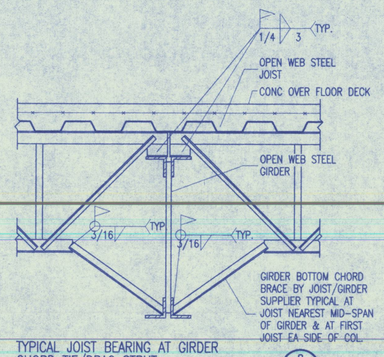

TYPICAL JOIST BEARING AT GIRDER CHORD TIE/DRAG STRUT
NO SCALE
8 S5.1
JL175/11

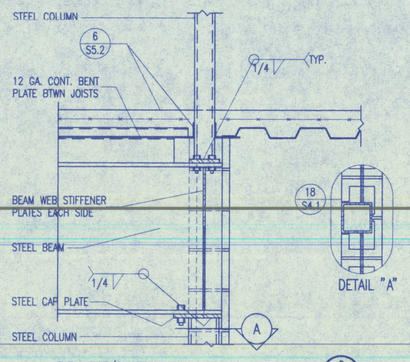

TYP JOIST/GIRDER BEARING AT STEEL COLUMN
NO SCALE
9 S5.1
3204-551/09

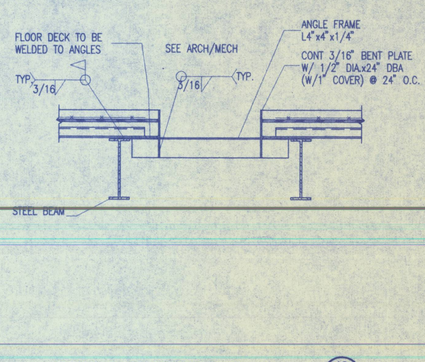

TYPICAL FLOOR OPENING DETAIL
NO SCALE
10 S5.1
3204-551/10

NOT USED
NO SCALE
6 S5.1
3204-551/06

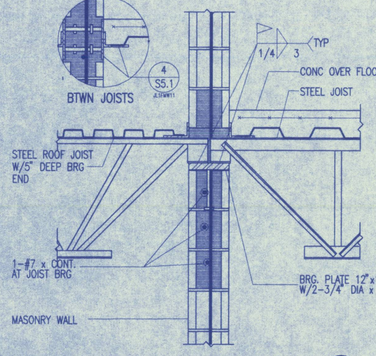

TYP JOIST/DECK BEARING AT MASONRY WALL
NO SCALE
11 S5.1
3204-551/11

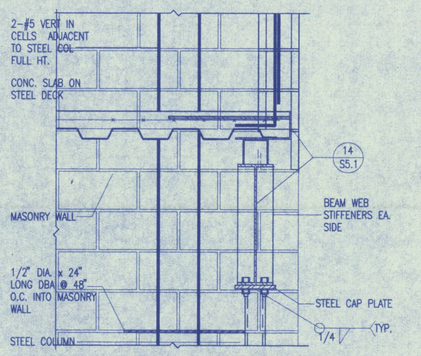

STEEL BEAM ON STEEL COLUMN IN MASONRY WALL
NO SCALE
12 S5.1
3204-551/12

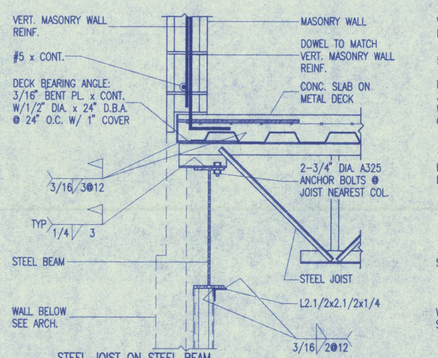

STEEL JOIST ON STEEL BEAM WITH MASONRY WALL ABOVE
NO SCALE
13 S5.1
3204-551/13

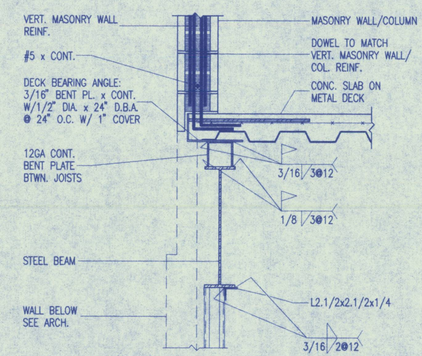

STEEL BEAM WITH MASONRY WALL ABOVE
NO SCALE
14 S5.1
3204-551/14

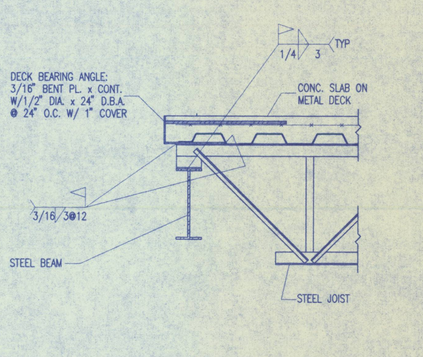

TYPICAL JOIST BEARING AT STEEL BEAM
NO SCALE
15 S5.1
3204-551/15

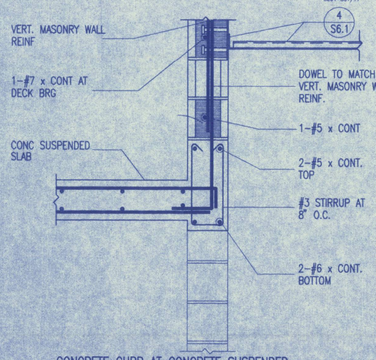

CONCRETE CURB AT CONCRETE SUSPENDED SLAB WITH MASONRY WALL ABOVE
NO SCALE
16 S5.1
3204-551/16

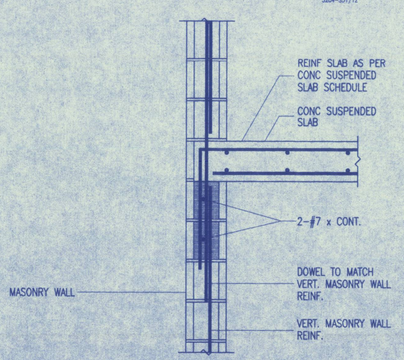

CONCRETE SUSPENDED SLAB AT MASONRY WALL
NO SCALE
17 S5.1
3204-551/17

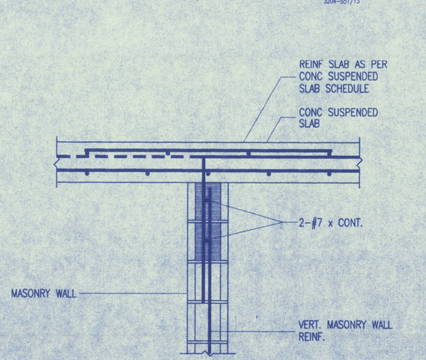

CONCRETE SUSPENDED SLAB AT MASONRY WALL
NO SCALE
18 S5.1
3204-551/18

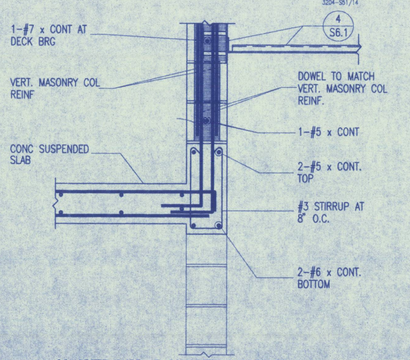

CONCRETE CURB AT CONCRETE SUSPENDED SLAB WITH MASONRY COLUMN ABOVE
NO SCALE
19 S5.1
3204-551/19

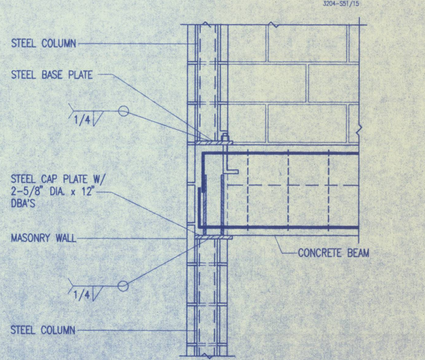

CONCRETE BEAM BEARING AT STEEL COLUMN
NO SCALE
20 S5.1
3204-551/20

REAVELEY ENGINEERS & ASSOCIATES INC.
198 SOUTH 900 EAST (801) 486-3883
SALT LAKE CITY, UTAH FAX (801) 485-0186
84105-2424

LICENSED CERTIFIED STRUCTURAL ENGINEER
NO. 171026
DON W. BARKER
UTAH

REVISIONS

NO.	DATE	EXPLANATION	DRAWN

DRAWN BY: C.E.B. CHECKED BY: S.L.K.

THE NEW
ALICE C. HARRIS
INTERMEDIATE SCHOOL
LOCATED IN
TREMONTON, UTAH 84337

NAYLOR WENTWORTH ARCHITECTS
175 West 200 South Suite 1000
Salt Lake City, Utah 84101
Tel 801 355-5959
Fax 801 355-5980
A PROFESSIONAL CORPORATION

S5.1

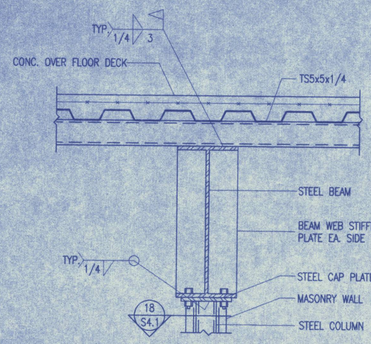

TYPICAL BRACE AT GIDER/COLUMN
NO SCALE
1 S5.2
3204-S5/01

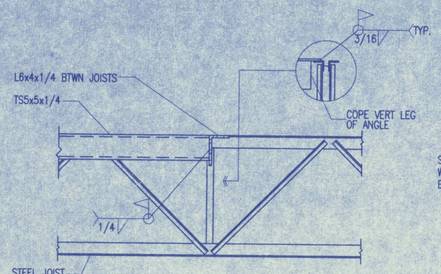

TYPICAL BRACE TO TOP CHORD DETAIL
NO SCALE
2 S5.2
3204-S5/02

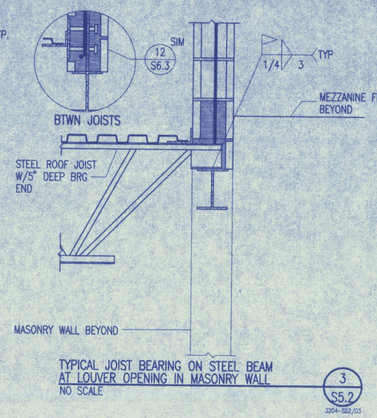

TYPICAL JOIST BEARING ON STEEL BEAM
AT LOUVER OPENING IN MASONRY WALL
NO SCALE
3 S5.2
3204-S52/03

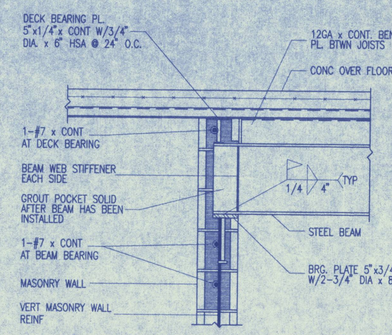

BEAM BEARING AT MASONRY WALL
NO SCALE
4 S5.2
3204-S52/04

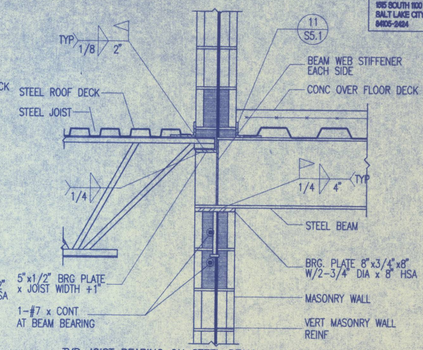

TYP JOIST BEARING ON STEEL BEAM
AT MASONRY WALL
NO SCALE
5 S5.2
3204-S52/05

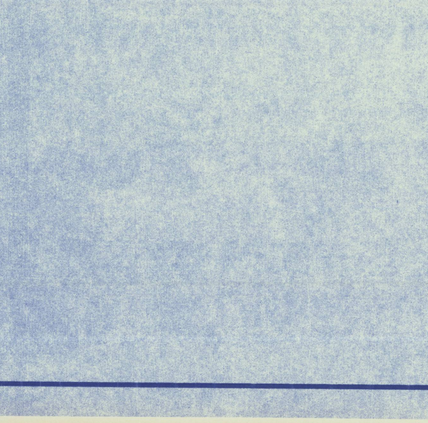

DECK BEARING AT STEEL COLUMN
IN MASONRY WALL
NO SCALE
6 S5.2
3204-S52/06

REAVELEY ENGINEERS & ASSOCIATES INC.
1815 SOUTH 1100 EAST (801) 486-3883
SALT LAKE CITY, UTAH FAX (801) 485-0061
84105-2404

LICENSED CERTIFIED STRUCTURAL ENGINEER
NO. 171026
DON W. BARKER
UTAH

REVISIONS

NO.	DATE	EXPLANATION	DRAWN

DRAWN BY: C.E.R. CHECKED BY: S.L.K.

THE NEW
ALICE C. HARRIS
INTERMEDIATE SCHOOL
LOCATED IN
TREMONTON, UTAH 84337

NAYLOR WENTWORTH ARCHITECTS
175 West 200 South
Suite 1000
Salt Lake City, Utah 84101
Tel 801 355-5959
Fax 801 355-5960
A PROFESSIONAL CORPORATION

S5.2

REAVELEY ENGINEERS & ASSOCIATES INC.
185 SOUTH 1200 EAST
SALT LAKE CITY, UTAH
84105-2424
(801) 486-3883
FAX (801) 485-0186

LICENSED CERTIFIED STRUCTURAL ENGINEER
NO. 171026
DON W. BARKER
UTAH

REVISIONS

NO.	DATE	EXPLANATION	DRAWN

DRAWN BY: C.E.B. CHECKED BY: S.L.K.

THE NEW
ALICE C. HARRIS
INTERMEDIATE SCHOOL
LOCATED IN
TREMONTON, UTAH 84337

NAYLOR WENTWORTH ARCHITECTS
175 West 200 South
Suite 1000
Salt Lake City, Utah 84101
Tel 801 355-5959
Fax 801 355-5960
A PROFESSIONAL CORPORATION

S6.1

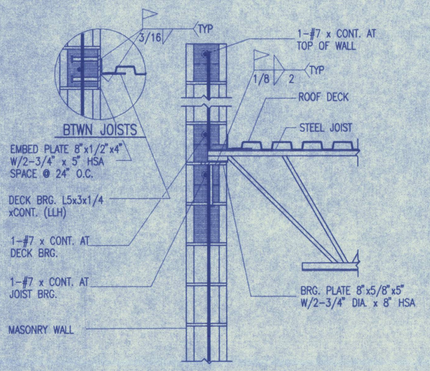

TYP. JOIST/DECK BEARING AT MASONRY WALL
NO SCALE
1 S6.1
3204-581/01

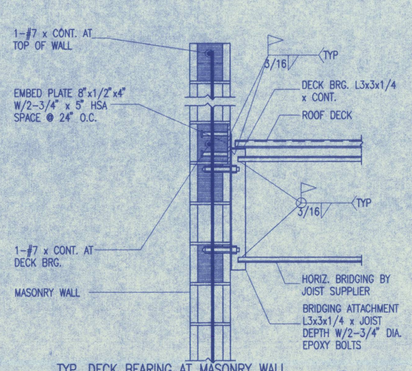

TYP. DECK BEARING AT MASONRY WALL WITH BRIDGING ATTACHMENT
NO SCALE
2 S6.1
3204-581/02

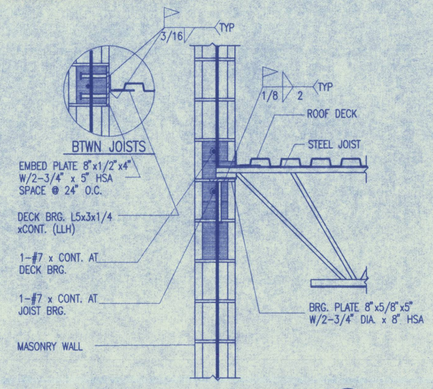

TYP. JOIST/DECK BEARING AT MASONRY WALL
NO SCALE
3 S6.1
3204-581/03

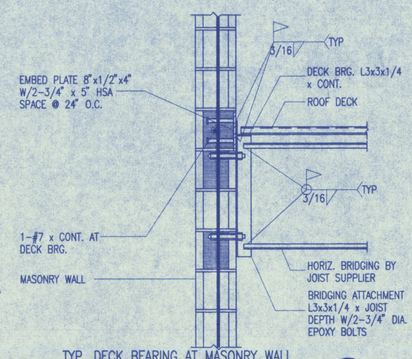

TYP. DECK BEARING AT MASONRY WALL WITH BRIDGING ATTACHMENT
NO SCALE
4 S6.1
3204-581/04

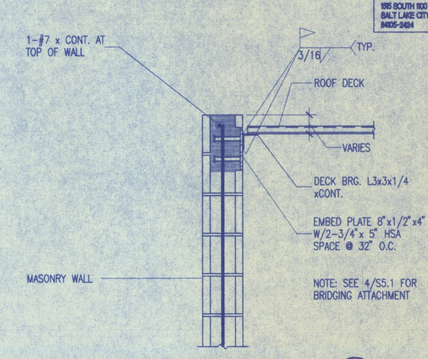

TYPICAL DECK BEARING AT MASONRY WALL
NO SCALE
5 S6.1
3204-581/05

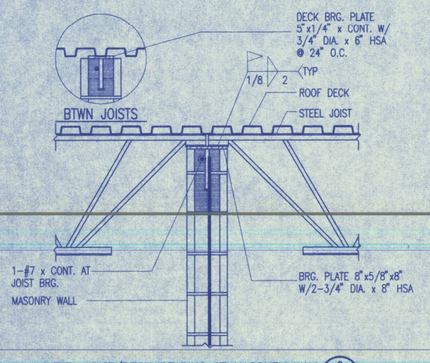

TYP. JOIST/DECK BEARING AT MASONRY WALL
NO SCALE
6 S6.1
3204-581/06

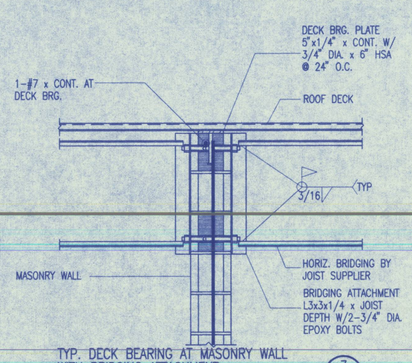

TYP. DECK BEARING AT MASONRY WALL WITH BRIDGING ATTACHMENT
NO SCALE
7 S6.1
JK2RNWG7

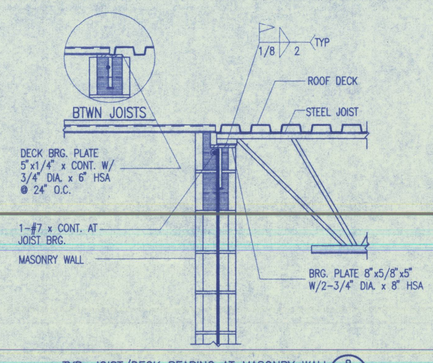

TYP. JOIST/DECK BEARING AT MASONRY WALL
NO SCALE
8 S6.1
3204-581/08

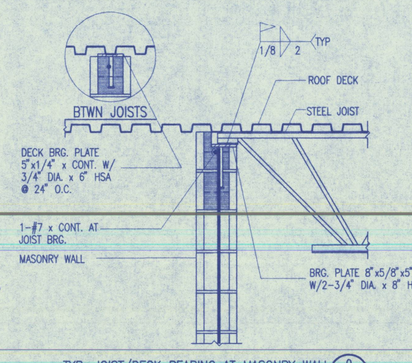

TYP. JOIST/DECK BEARING AT MASONRY WALL
NO SCALE
9 S6.1
3204-581/09

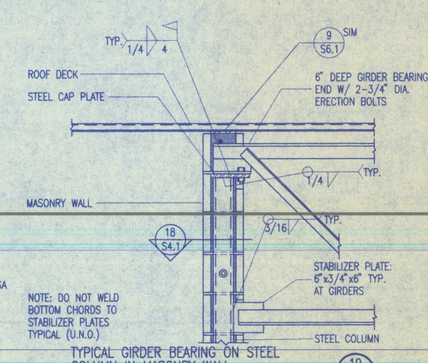

TYPICAL GIRDER BEARING ON STEEL COLUMN IN MASONRY WALL
NO SCALE
10 S6.1
3204-581/10

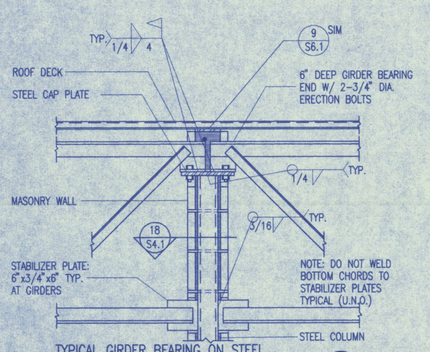

TYPICAL GIRDER BEARING ON STEEL COLUMN IN MASONRY WALL
NO SCALE
11 S6.1
3204-581/11

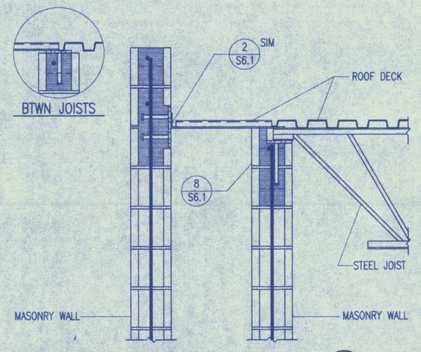

TYP. JOIST/DECK BEARING AT MASONRY WALL
NO SCALE
12 S6.1
3204-581/12

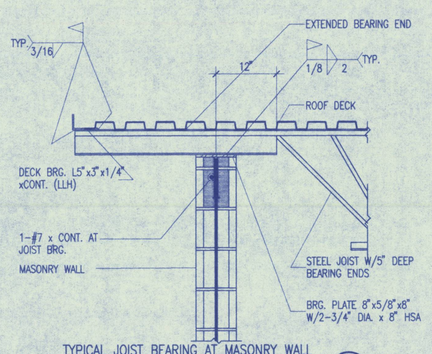

TYPICAL JOIST BEARING AT MASONRY WALL WITH EXTENDED END
NO SCALE
13 S6.1
3204-581/13

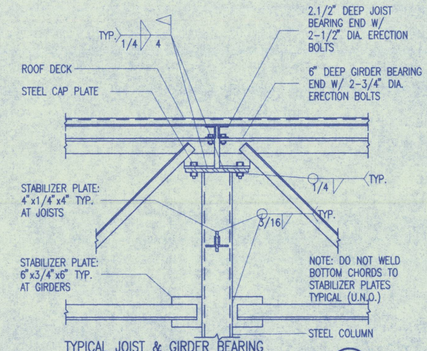

TYPICAL JOIST & GIRDER BEARING ON INTERIOR STEEL COLUMN
NO SCALE
14 S6.1
JK1RTS2

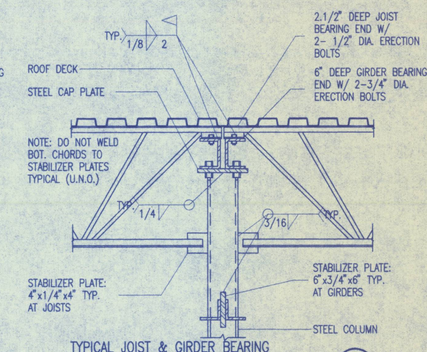

TYPICAL JOIST & GIRDER BEARING ON INTERIOR STEEL COLUMN
NO SCALE
15 S6.1
JK1RTS1

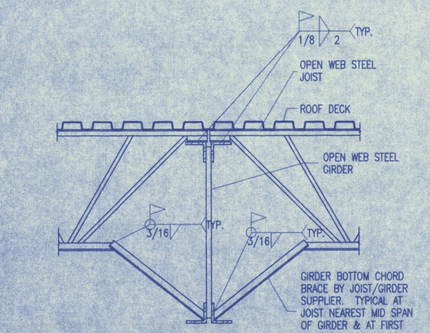

TYPICAL JOIST BEARING AT GIRDER CHORD TIE/DRAG STRUT
NO SCALE
16 S6.1
3204-581/16

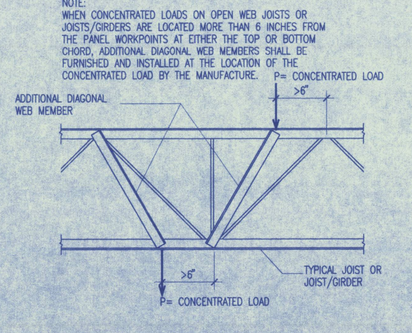

TYPICAL DETAIL AT ADDITIONAL CONCENTRATED POINT LOAD
NO SCALE
17 S6.1
JK1RTS12

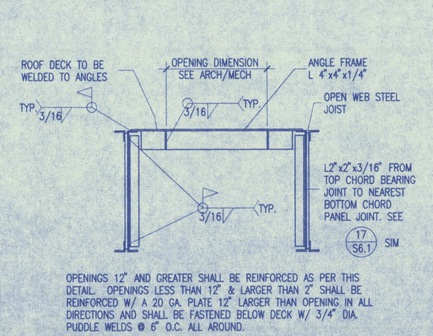

OPENINGS 12" AND GREATER SHALL BE REINFORCED AS PER THIS DETAIL. OPENINGS LESS THAN 12" & LARGER THAN 2" SHALL BE REINFORCED W/ A 20 GA. PLATE 12" LARGER THAN OPENING IN ALL DIRECTIONS AND SHALL BE FASTENED BELOW DECK W/ 3/4" DIA. PUDDLE WELDS @ 6" O.C. ALL AROUND.

TYPICAL ROOF OPENING DETAIL
NO SCALE
18 S6.1
3204-581/18

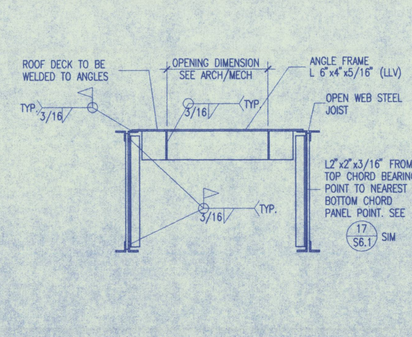

TYPICAL MECH. UNIT SUPPORT DETAIL
NO SCALE
19 S6.1
JK1RTS14

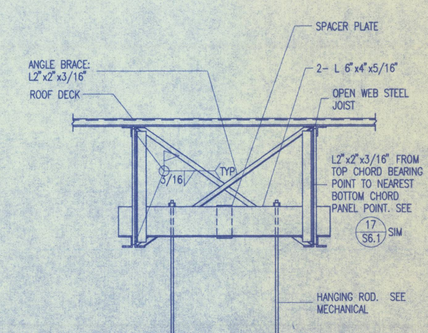

TYPICAL HANGING MECHANICAL UNIT SUPPORT DETAIL
NO SCALE
20 S6.1
JK1RTS15

REAVELEY ENGINEERS & ASSOCIATES INC.
595 SOUTH 600 EAST (801) 486-3868
SALT LAKE CITY, UTAH FAX (801) 486-3918
84105-2494

LICENSED CERTIFIED STRUCTURAL ENGINEER
NO. 171026
DON W. BARKER
UTAH

REVISIONS

NO.	DATE	EXPLANATION	DRAWN

DRAWN BY: C.E.R. CHECKED BY: S.L.K.

THE NEW
ALICE C. HARRIS
INTERMEDIATE SCHOOL
LOCATED IN
TREMONTON, UTAH 84337

NAYLOR WENTWORTH ARCHITECTS
175 West 200 South
Suite 1001
Salt Lake City, Utah 84101
Tel 801 355-5999
Fax 801 355-5980
A PROFESSIONAL CORPORATION

S6.2

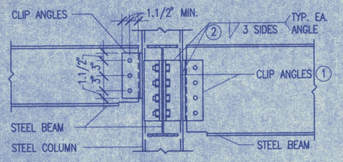

BEAM TO COLUMN CLIP ANGLE CONNECTION

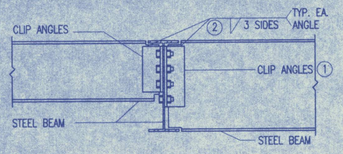

BEAM TO BEAM CLIP ANGLE CONNECTION

TYPICAL BOLTED CLIP ANGLE CONNECTIONS W/BOLT SCHEDULE
NO SCALE
1 S6.2 3204-582/03

A-325 BOLT SCHEDULE

MAXIMUM BEAM SIZE IN EACH BEAM DEPTH GROUP	A-325N BOLTS NO. PER LEG	A-325N BOLTS SIZE
W6, W8, W10	2	3/4"
W12, W14	3	3/4"
W16	4	3/4"
W18	5	3/4"
W21	6	3/4"
W24	7	3/4"
W30	8	3/4"

NOTES:
1. CLIP ANGLES: 2-L4x3.1/2. THICKNESS SHALL BE EQUAL TO ONE HALF THE BEAM WEB THICKNESS PLUS 1/16" (1/4" MIN.). FOR TWO ROWS OF BOLTS OR SKEWED CONNECTIONS, USE BENT PLATES.
2. FILLET WELDS SHALL BE ANGLE THICKNESS MINUS 1/16" (1/4" MIN.)
3. CONTRACTOR HAS OPTION TO BOLT CLIP ANGLES AT EITHER BEAM WEB IN BEAM TO BEAM CONNECTIONS.
4. BOLT EDGE DISTANCE SHALL BE 1.1/2" MIN. AT ALL BEAM AND CLIP ANGLE EDGES. BOLT SPACING SHALL BE 3" O.C. MIN.

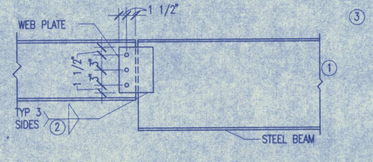

WEB PLATE BEAM TO BEAM CONNECTION

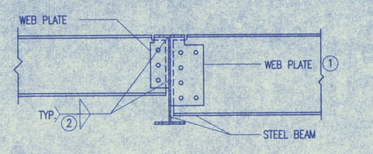

WEB PLATE BEAM TO BEAM CONNECTION

TYPICAL BOLTED WEB PLATE CONNECTIONS W/BOLT SCHEDULE
NO SCALE
2 S6.2 3204-582/06

A-325 BOLT SCHEDULE

MAXIMUM BEAM SIZE IN EACH BEAM DEPTH GROUP	A-325 BOLTS NO PER LEG	A-325 BOLTS SIZE
W6, W8, W10	2	3/4"
W12, W14	3	3/4"
W16	4	3/4"
W18	5	3/4"
W21	6	3/4"
W24	7	3/4"
W30	8	3/4"

NOTES:
1. BEAM WEB CONNECTION PLATES. THICKNESS EQUALS THE BEAM WEB THICKNESS PLUS 1/8" (3/8" MIN.)
2. FILLET WELDS SHALL BE AS FOLLOWS:
   ONE SIDE PLATE THICKNESS MINUS 1/16" (1/4" MIN.)
   TWO SIDES 1/2" PLATE THICKNESS PLUS 1/16" (1/4" MIN.) EACH SIDE
3. THICKNESS EQUALS BEAM FLANGE THICKNESS OF BEAM FRAMING INTO COLUMN WEB. (3/8" MIN.)
4. BOLT EDGE DISTANCE SHALL BE 1.1/2" MIN. AT ALL EDGES. BOLT SPACING SHALL BE 3" MIN.

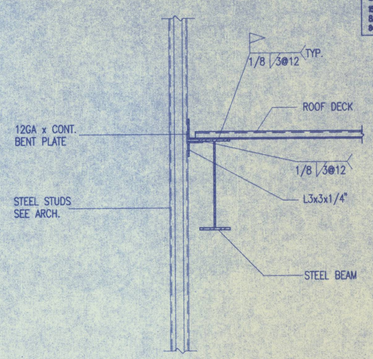

TYPICAL EDGE CONDITION AT STEEL BEAM
NO SCALE
3 S6.2 3204-582/03

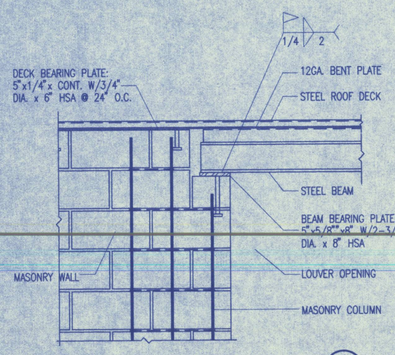

STEEL BEAM BEARING AT LOUVER OPENING
NO SCALE
4 S6.2 3204-582/04

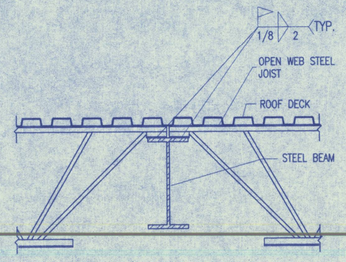

TYPICAL JOIST BEARING AT STEEL BEAM CHORD TIE DRAG STRUT
NO SCALE
5 S6.2 3204-582/05

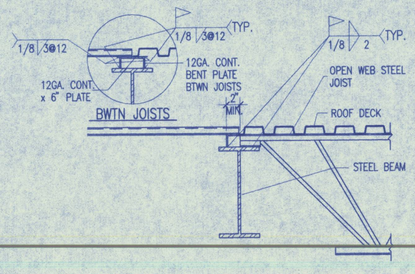

TYPICAL JOIST BEARING AT STEEL BEAM
NO SCALE
6 S6.2 3204-582/06

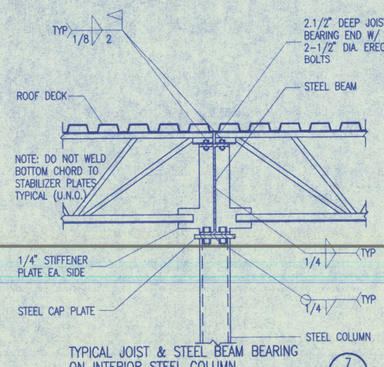

TYPICAL JOIST & STEEL BEAM BEARING ON INTERIOR STEEL COLUMN
NO SCALE
7 S6.2 JK110W14

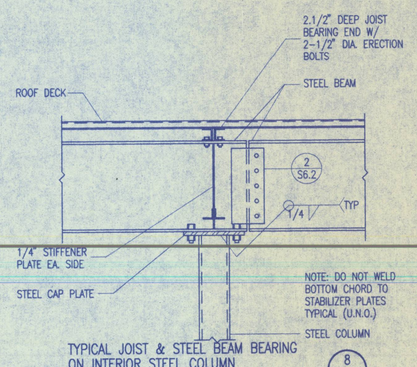

TYPICAL JOIST & STEEL BEAM BEARING ON INTERIOR STEEL COLUMN
NO SCALE
8 S6.2 JK110W13

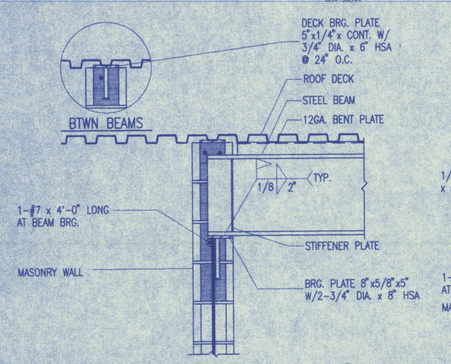

TYP. BEAM/DECK BEARING AT MASONRY WALL
NO SCALE
9 S6.2 3204-582/09

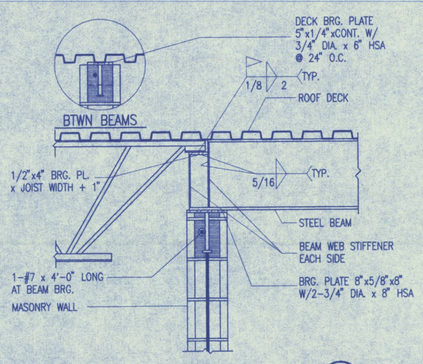

TYP. BEAM/JOIST BEARING AT MASONRY WALL
NO SCALE
10 S6.2 3204-582/10

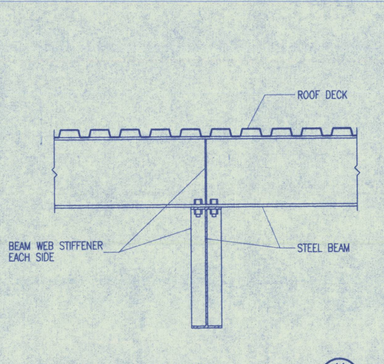

BEAM TO BEAM CONNECTION
NO SCALE
11 S6.2 3204-582/11

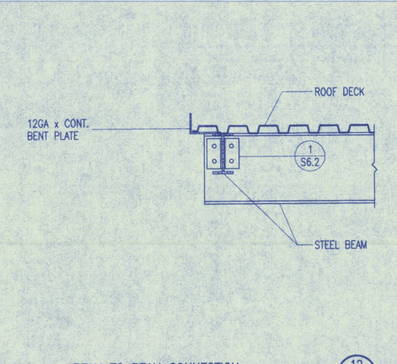

BEAM TO BEAM CONNECTION
NO SCALE
12 S6.2 3204-582/12

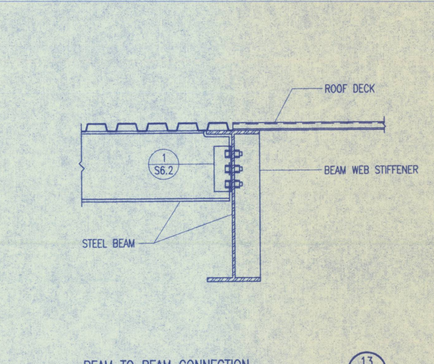

BEAM TO BEAM CONNECTION
NO SCALE
13 S6.2 3204-582/13

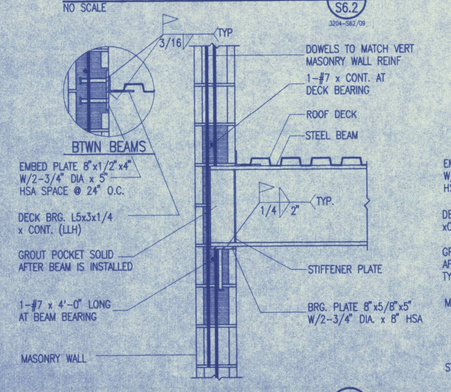

TYP. BEAM/DECK BEARING AT MASONRY WALL
NO SCALE
14 S6.2 3204-582/14

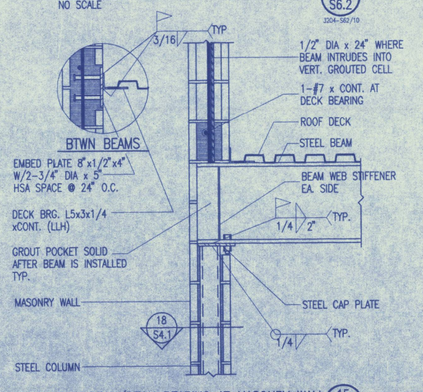

TYP. BEAM/DECK BEARING AT MASONRY WALL
NO SCALE
15 S6.2 3204-582/15

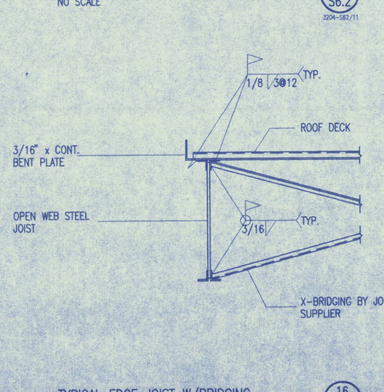

TYPICAL EDGE JOIST W/BRIDGING
16 S6.2 3204-582/16

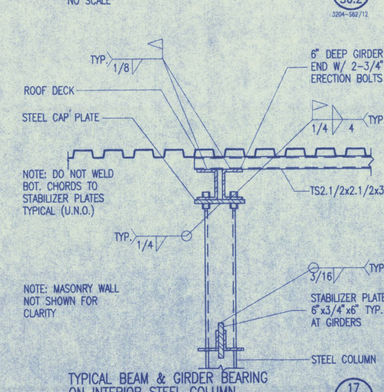

TYPICAL BEAM & GIRDER BEARING ON INTERIOR STEEL COLUMN
NO SCALE
17 S6.2 3204-582/17

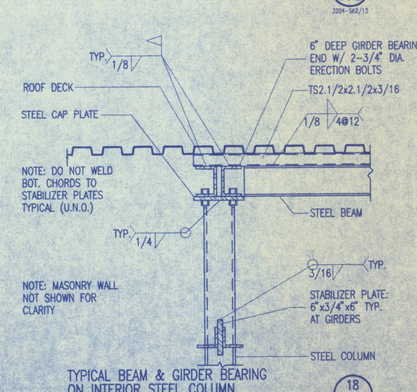

TYPICAL BEAM & GIRDER BEARING ON INTERIOR STEEL COLUMN
NO SCALE
18 S6.2 3204-582/18

REAVELEY ENGINEERS & ASSOCIATES INC.
195 SOUTH 100 EAST
SALT LAKE CITY, UTAH
84105-2424
(800) 466-3663
FAX (800) 466-0961

LICENSED CERTIFIED STRUCTURAL ENGINEER
NO. 171026
DON W. BARKER
UTAH

REVISIONS

NO.	DATE	EXPLANATION	DRAWN

DRAWN BY: C.E.B. CHECKED BY: S.L.K.

THE NEW
ALICE C. HARRIS
INTERMEDIATE SCHOOL
LOCATED IN
TREMONTON, UTAH 84337

NAYLOR WENTWORTH ARCHITECTS
175 West 200 South
Suite 1000
Salt Lake City, Utah 84101
Tel 801 355-5959
Fax 801 355-5960
A PROFESSIONAL CORPORATION

S6.3

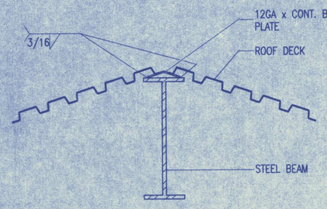

TYPICAL ROOF DECK TO STEEL RIDGE BEAM 1 S6.3 3204-583/01
NO SCALE

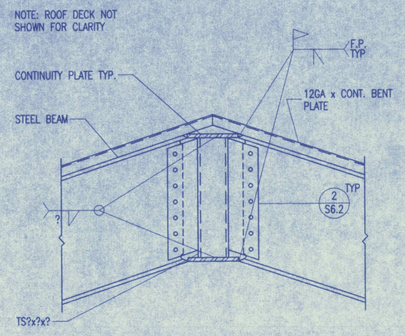

TYPICAL MOMENT FRAME CONNECTION 2 S6.3 3204-583/02
NO SCALE

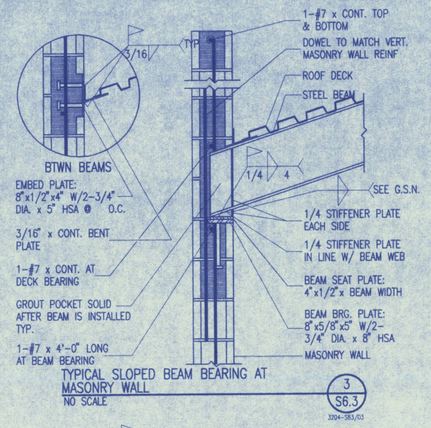

TYPICAL SLOPED BEAM BEARING AT MASONRY WALL 3 S6.3 3204-583/03
NO SCALE

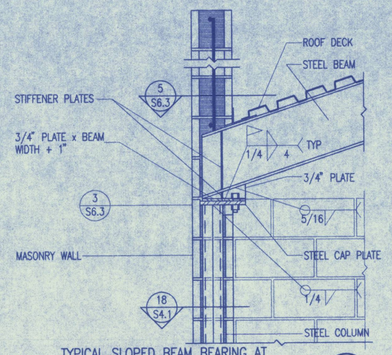

TYPICAL SLOPED BEAM BEARING AT STEEL COLUMN IN MASONRY WALL 4 S6.3 3204-583/04
NO SCALE

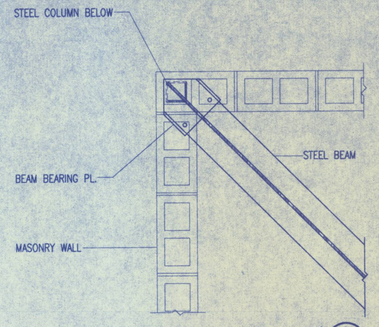

STEEL BEAM TO STEEL COLUMN (PLAN VIEW) 5 S6.3 3204-583/05
NO SCALE

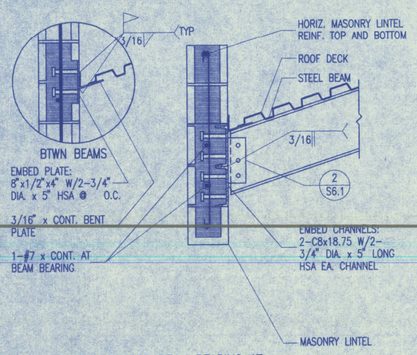

TYPICAL SLOPED BEAM BEARING AT MASONRY LINTEL 6 S6.3 3204-583/06
NO SCALE

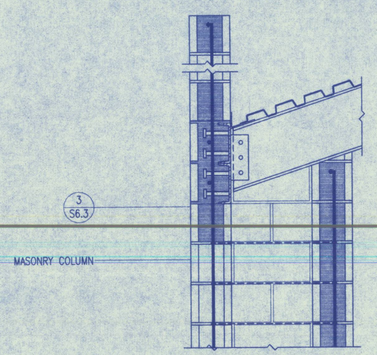

TYPICAL STEEL BEAM AT MASONRY COLUMN 7 S6.3 3204-583/07
NO SCALE

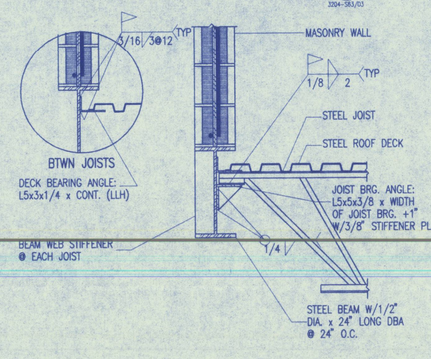

STEEL JOIST BEARING ON STEEL BEAM WITH MASONRY WALL ABOVE 8 S6.3 3204-583/08
NO SCALE

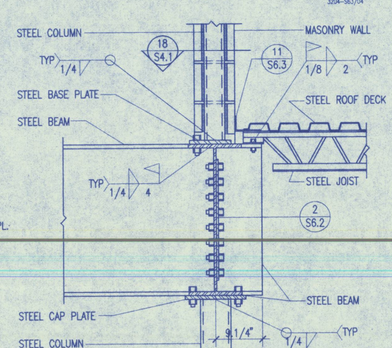

STEEL BEAM TO STEEL COLUMN WITH MASONRY WALL ABOVE 9 S6.3 3204-583/09
NO SCALE

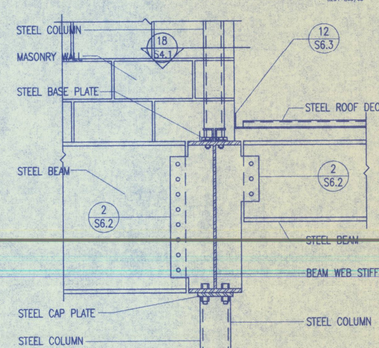

STEEL BEAM TO STEEL COLUMN WITH MASONRY WALL ABOVE 10 S6.3 3204-583/10
NO SCALE

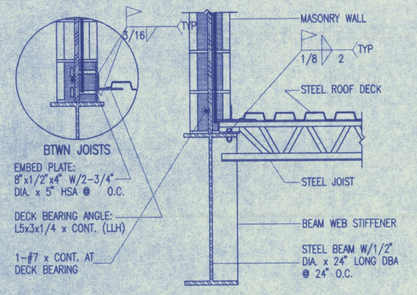

STEEL JOIST TO STEEL BEAM WITH MASONRY WALL ABOVE 11 S6.3 3204-583/11
NO SCALE

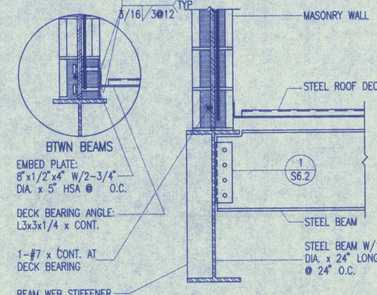

STEEL BEAM TO STEEL BEAM WITH MASONRY WALL ABOVE 12 S6.3 3204-583/12
NO SCALE

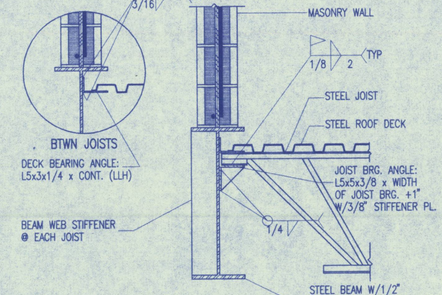

STEEL JOIST BEARING ON STEEL BEAM WITH MASONRY WALL ABOVE 13 S6.3 3204-583/13
NO SCALE

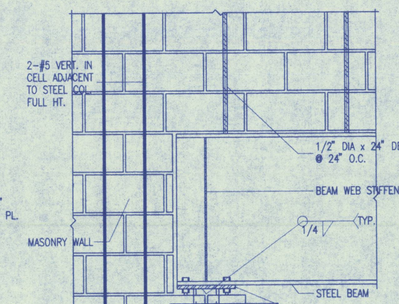

STEEL BEAM ON STEEL COLUMN IN MASONRY WALL 14 S6.3 3204-583/14
NO SCALE

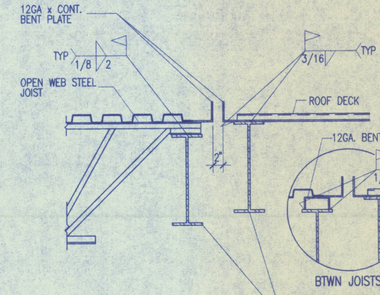

TYPICAL JOIST BEARING AT STEEL BEAM AT EXPANSION JOINT 15 S6.3 3204-583/15
NO SCALE

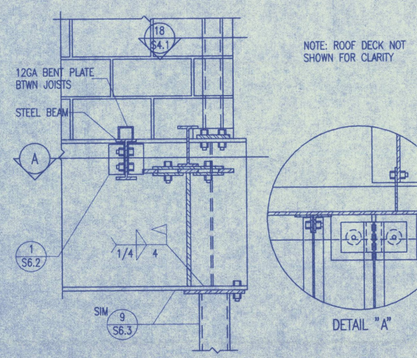

TYPICAL BEAM BEARING AT EXPANSION JOINT 16 S6.3 3204-583/16
NO SCALE

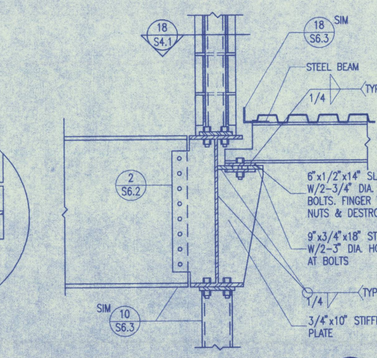

TYPICAL BEAM BEARING AT EXPANSION JOINT 17 S6.3 3204-583/17
NO SCALE

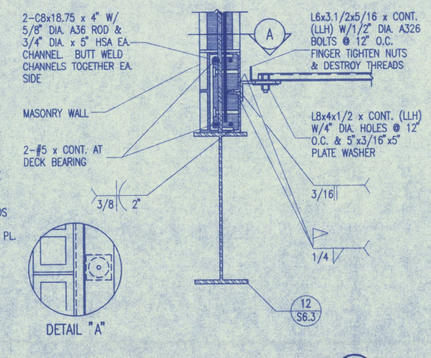

TYPICAL DECK BEARING AT EXPANSION JOINT 18 S6.3 3204-583/18
NO SCALE

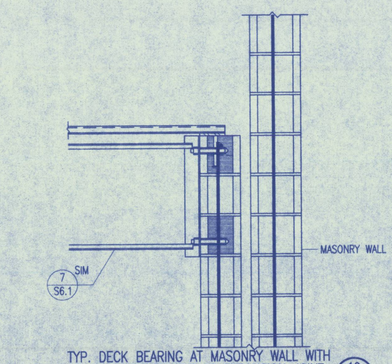

TYP. DECK BEARING AT MASONRY WALL WITH BRIDGING ATTACHMENT AT EXPANSION JOINT 19 S6.3 3204-583/19
NO SCALE

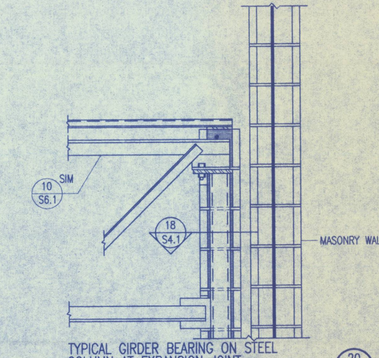

TYPICAL GIRDER BEARING ON STEEL COLUMN AT EXPANSION JOINT 20 S6.3 3204-583/20
NO SCALE

REAVELEY ENGINEERS & ASSOCIATES INC.
185 SOUTH 1100 EAST
SALT LAKE CITY, UTAH
84105-2424
(801) 486-3883
FAX (801) 485-0186

LICENSED CERTIFIED STRUCTURAL ENGINEER
NO. 171026
DON W. BARKER
UTAH

REVISIONS

NO.	DATE	EXPLANATION	DRAWN

DRAWN BY: C.E.B. CHECKED BY: S.L.K.

THE NEW
ALICE C. HARRIS
INTERMEDIATE SCHOOL
LOCATED IN
TREMONTON, UTAH 84337

NAYLOR WENTWORTH ARCHITECTS
175 West 200 South
Suite 1000
Salt Lake City, Utah 84101
Tel 801 355-5959
Fax 801 355-5960
A PROFESSIONAL CORPORATION

S6.4

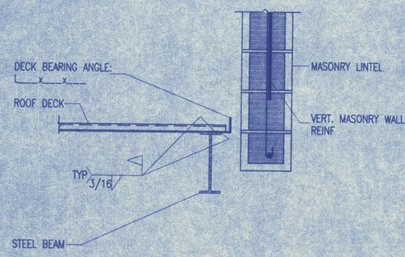

TYP. DECK BEARING AT STEEL BEAM AT EXPANSION JOINT
NO SCALE — 1 / S6.4 — 3204-S64/01

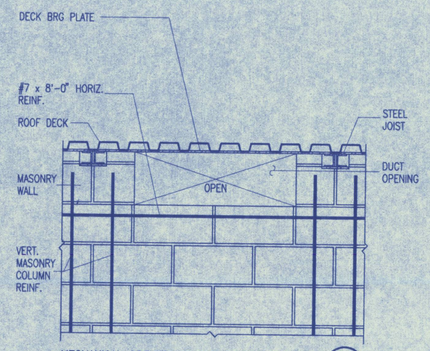

MECHANICAL OPENING AT TOP OF MASONRY WALL
NO SCALE — 2 / S6.4 — 3204-S64/02

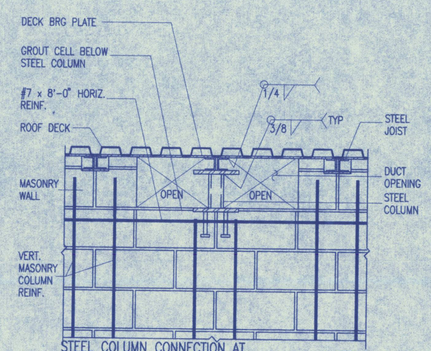

STEEL COLUMN CONNECTION AT MECHANICAL PASS-THROUGH
NO SCALE — 3 / S6.4 — 3204-S64/03

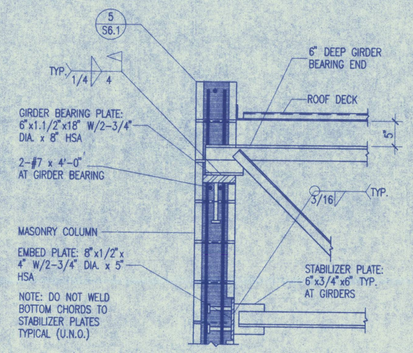

TYPICAL GIRDER BEARING ON MASONRY WALL
NO SCALE — 4 / S6.4 — 3204-S64/04

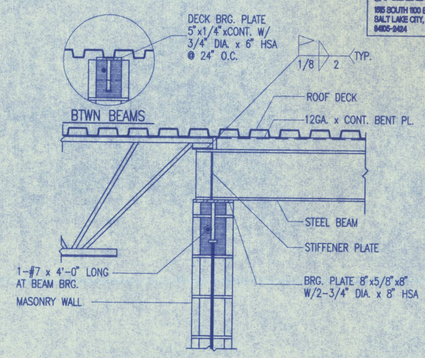

TYP. BEAM/JOIST BEARING AT MASONRY WALL
NO SCALE — 5 / S6.4 — 3204-S64/05

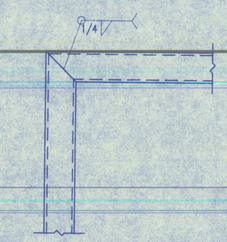

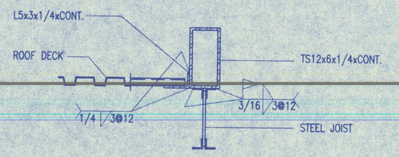

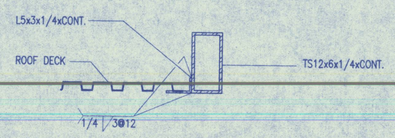

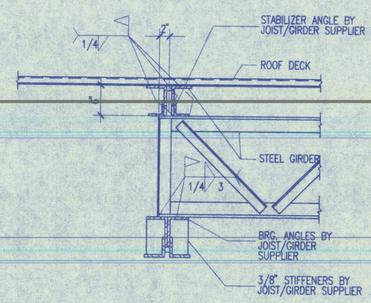

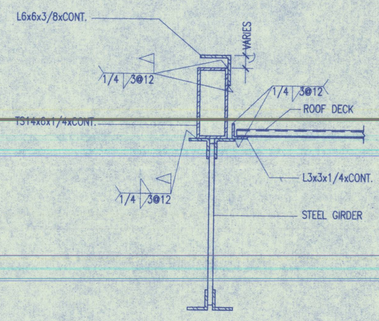

SKYLIGHT CONNECTION – PLAN VIEW
NO SCALE — 6 / S6.4 — 3204-S64/06

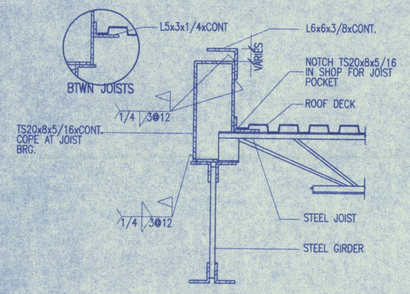

SKYLIGHT DETAIL
NO SCALE — 7 / S6.4 — 3204-S64/07

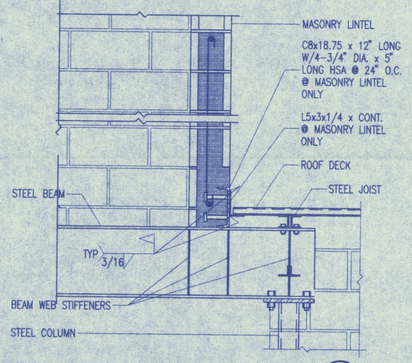

SKYLIGHT DETAIL
NO SCALE — 8 / S6.4 — 3204-S64/08

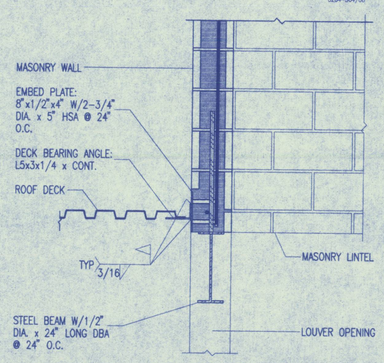

STEEL GIRDER TO STEEL GIRDER DETAIL
NO SCALE — 9 / S6.4 — 3204-S64/09

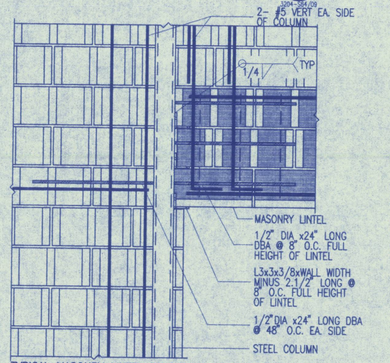

SKYLIGHT DETAIL
NO SCALE — 10 / S6.4 — 3204-S64/10

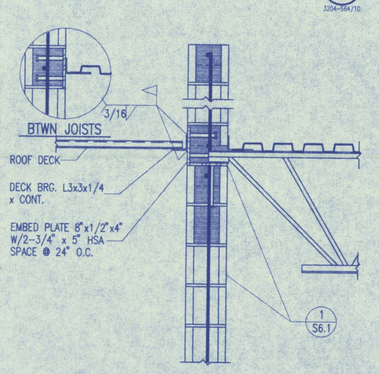

SKYLIGHT DETAIL
NO SCALE — 11 / S6.4 — 3204-S64/11

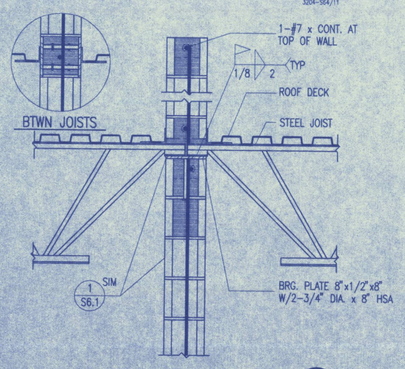

MASONRY LINTEL BEARING AT STEEL BEAM
NO SCALE — 12 / S6.4 — 3204-S64/12

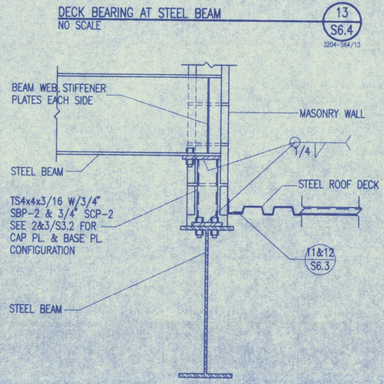

DECK BEARING AT STEEL BEAM
NO SCALE — 13 / S6.4 — 3204-S64/13

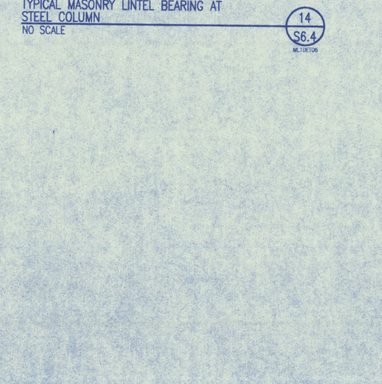

TYPICAL MASONRY LINTEL BEARING AT STEEL COLUMN
NO SCALE — 14 / S6.4 — MK.10R106

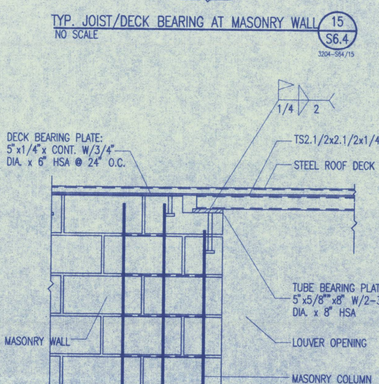

TYP. JOIST/DECK BEARING AT MASONRY WALL
NO SCALE — 15 / S6.4 — 3204-S64/15

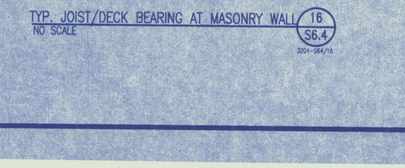

MASONRY LINTEL BEARING ON STEEL COLUMN
NO SCALE — 17 / S6.4 — 3204-S64/17

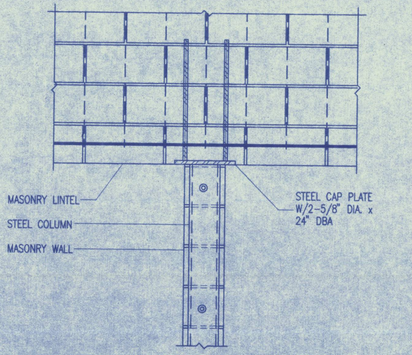

TYPICAL CEILING BEAM CONNECTION
NO SCALE — 18 / S6.4 — 3204-S64/18

NOT USED
NO SCALE — 19 / S6.4 — 3204-S64/19

STEEL TUBE ON MASONRY WALL
NO SCALE — 20 / S6.4 — 3204-S64/20

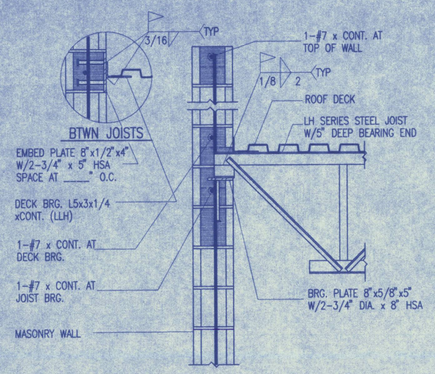

TYP. JOIST/DECK BEARING AT MASONRY WALL 1 S6.5
NO SCALE
3204-S65/01

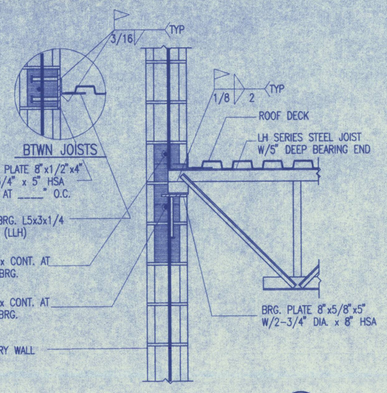

TYP. JOIST/DECK BEARING AT MASONRY WALL 2 S6.5
NO SCALE
3204-S65/02

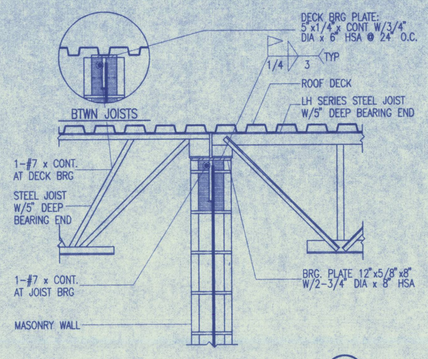

TYP JOIST/DECK BEARING AT MASONRY WALL 3 S6.5
NO SCALE
3204-S65/03

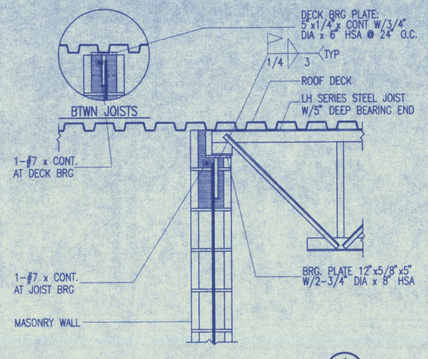

TYP JOIST/DECK BEARING AT MASONRY WALL 4 S6.5
NO SCALE
3204-S65/04

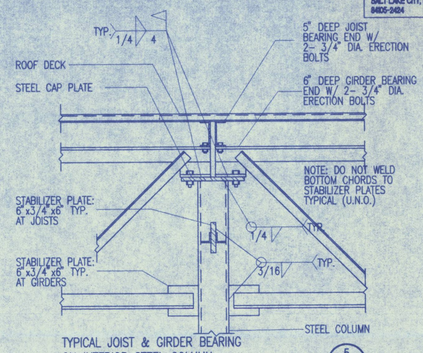

TYPICAL JOIST & GIRDER BEARING ON INTERIOR STEEL COLUMN 5 S6.5
NO SCALE
JL185504

TYPICAL GIRDER & JOIST BEARING ON INTERIOR STEEL COLUMN 6 S6.5
NO SCALE
JL185501

TYPICAL JOIST BEARING AT GIRDER 7 S6.5
NO SCALE
JL185507

REAVELEY ENGINEERS & ASSOCIATES INC.
195 SOUTH 100 EAST
SALT LAKE CITY, UTAH
84105-2484
(801) 486-3883
FAX (801) 485-0181

LICENSED CERTIFIED STRUCTURAL ENGINEER
NO. 177026
DON W. BARKER
UTAH

REVISIONS

NO.	DATE	EXPLANATION	DRAWN

DRAWN BY: C.E.B. CHECKED BY: S.L.K.

THE NEW
ALICE C. HARRIS
INTERMEDIATE SCHOOL
LOCATED IN
TREMONTON, UTAH 84337

NAYLOR WENTWORTH ARCHITECTS
175 West 200 South
Suite 1000
Salt Lake City, Utah 84101
Tel 801 355-5959
Fax 801 355-5960
A PROFESSIONAL CORPORATION

S6.5

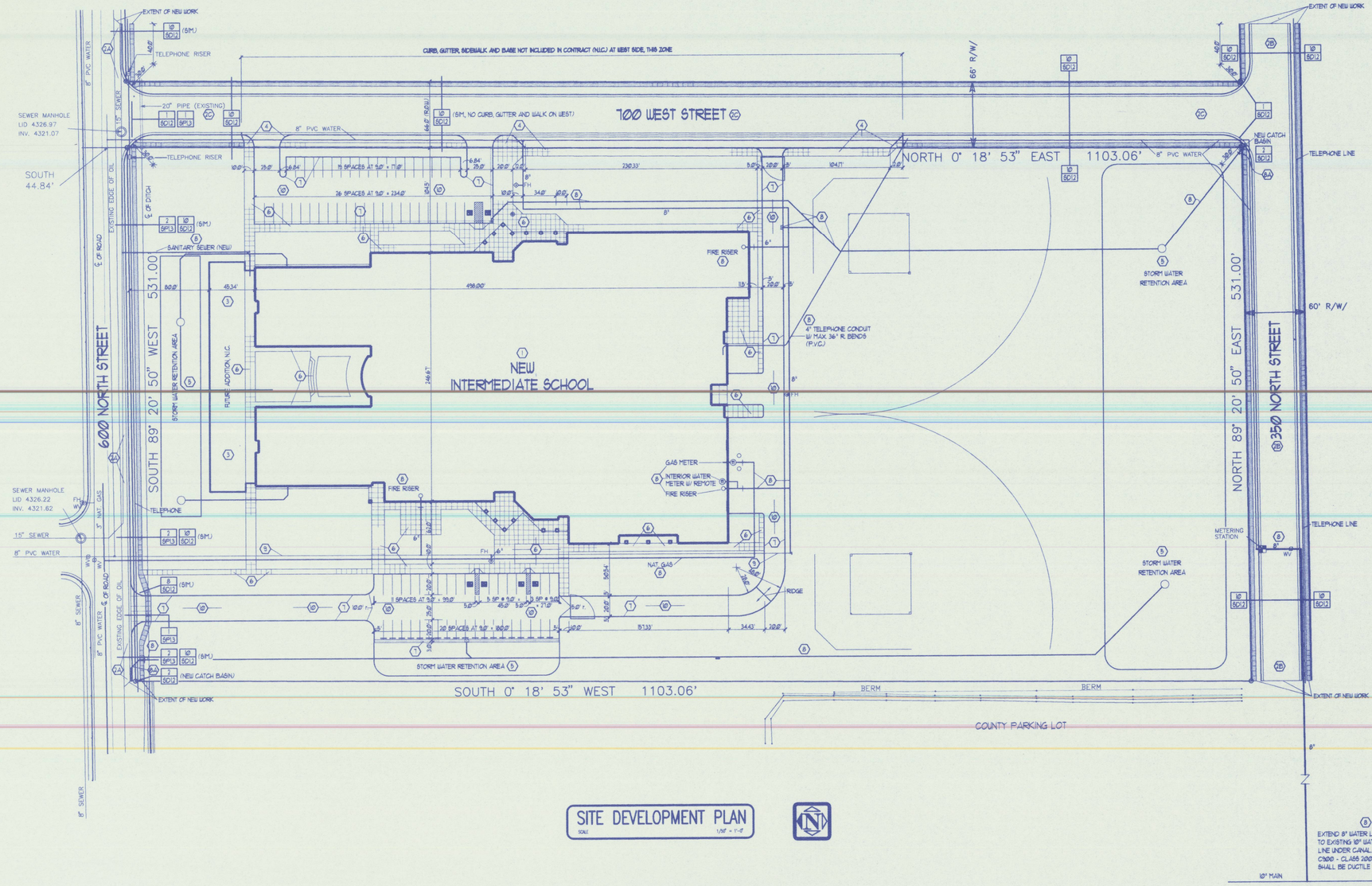

SITE DEVELOPMENT PLAN

SCALE 1/50" = 1'-0"

SITE REFERENCE NOTES

(1) NEW SCHOOL BUILDING PAD, FOOTINGS AND FOUNDATIONS UNDER THIS CONTRACT ONLY: REFER TO SHEET SP1.2.

(2) NEW STREET DEVELOPMENT AT PERIMETER OF SITE AS FOLLOWS:

(2A) 600 NORTH STREET: FURNISH AND INSTALL NEW CURB, GUTTER, ENTRY APPROACH, IRRIGATION COVER, CATCH BASIN, PIPING AND WALKS (SHOWN SHADED) ON THE SOUTH SIDE OF THIS ROAD. EXCAVATION, PREPARATION FOR ROADWAY WIDENING FROM EDGE OF EXISTING ASPHALT TO NEW CURB AND GUTTER LOCATION UNDER THIS CONTRACT: REFER TO SP1.2 AND SP1.3 FOR NOTES. ASPHALT PAVING, BASE AND SUB-BASE MATERIALS ARE NOT IN CONTRACT. SECTION 03300 TO FURNISH AND INSTALL NEW 24" IRRIGATION LINE IN EXISTING CONCRETE CULVERT, SEE SHEET SP1.3.

(2B) 350 NORTH STREET: FURNISH AND INSTALL NEW CURB, GUTTER AND CONCRETE WALKS (SHOWN SHADED) ON BOTH SIDES OF THIS ROAD. EXCAVATION AND PREPARATION OF ROAD UNDER THIS CONTRACT. REFER TO SP1.2. ASPHALT PAVING, BASE AND SUB-BASE MATERIALS ARE NOT IN CONTRACT.

(2C) 700 WEST STREET: FURNISH AND INSTALL NEW CURB, GUTTER, CONCRETE WALKS (SHOWN SHADED) ON BOTH SIDES OF THIS ROAD AND CATCH BASIN WITH PIPING, EXCEPT AS NOTED ON THE PLANS TO ALLOW FOR ACCESS DURING BUILDING CONSTRUCTION PHASE. FOR NOTATION, REFER TO SHEET SP1.2. ASPHALT PAVING, BASE AND SUB-BASE MATERIALS ARE NOT IN CONTRACT.

(3) FUTURE ADDITION AREA, BUILDING PAD PREPARATION, FOOTINGS AND FOUNDATIONS, ARE NOT INCLUDED IN CONTRACT.

(4) CURB, GUTTER, ENTRY APPROACHES AND SIDEWALK NOT INCLUDED IN CONTRACT TO ALLOW FOR ACCESS TO CONSTRUCTION.

(5) REFER TO SP1.2 FOR GRADING OF WATER RETENTION AREAS, N.I.C.

(6) FUTURE CONCRETE WALK WITH AGGREGATE BASE NOT IN CONTRACT (N.I.C.)

(7) FUTURE CONCRETE CURBS, GUTTERS, WATERWAYS WITH AGGREGATE BASE NOT IN CONTRACT (N.I.C.)

(8) SITE UTILITIES AND CONNECTIONS (NATURAL GAS, WATER, SANITARY SEWER, STORM SEWER AND TELEPHONE CONDUIT) NOT IN CONTRACT (N.I.C.).

(8A) AT NEW CATCH BASINS IN STREETS, RUN NEW 8" PIPE TO PROPERTY LINE, CAP AND PROPERLY IDENTIFY FOR FUTURE EXTENSION BY OTHERS.

(9) EXISTING PVC WATERLINE TO BE PROTECTED FROM DAMAGE DURING CONSTRUCTION.

(10) ASPHALT PAVING AND AGGREGATE BASE NOT INCLUDED IN CONTRACT (N.I.C.).

STATE OF UTAH
NAYLOR WENTWORTH ARCHITECTS
586
1102
1074
LICENSED ARCHITECT

REVISIONS

NO.	DATE	EXPLANATION	DRAWN	CHECKED BY:

DRAWN BY:

THE NEW
ALICE C. HARRIS
INTERMEDIATE SCHOOL
LOCATED IN
TREMONTON, UTAH 84337

NAYLOR WENTWORTH ARCHITECTS
A PROFESSIONAL CORPORATION
175 West 200 South
Suite 1000
Salt Lake City, Utah 84101
Tel 801 355-5959
Fax 801 355-5960

SD1.1

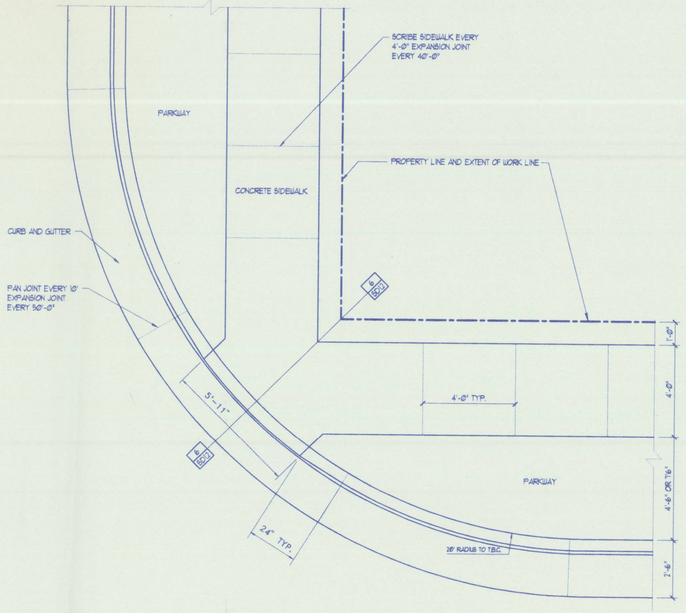

1 SD1.2 PARTIAL PLAN SCALE 3/8" = 1'-0"

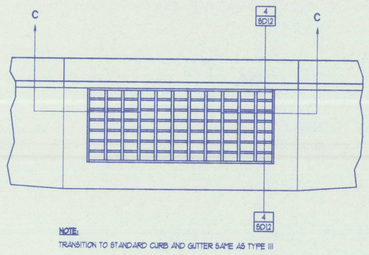

NOTE:
TRANSITION TO STANDARD CURB AND GUTTER SAME AS TYPE III

PLAN

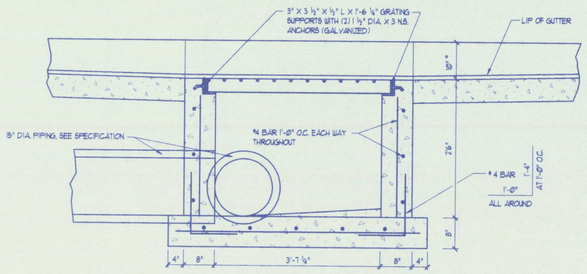

SECTION C-C

2 SD1.2 CATCH BASIN TYPE 4 DETAIL SCALE 3/4" = 1'-0"

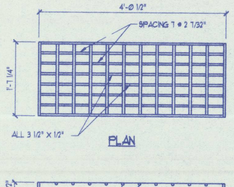

PLAN

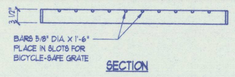

SECTION

NOTE:

1. ALL GRATES SHALL BE U.D.O.T. STD. V-988 AS SHOWN IN DETAIL AND GALVANIZED IN ACCORDANCE WITH U.D.O.T. STANDARDS.
2. BICYCLE SAFE GRATE REQUIRED WHERE SPECIFIED BY THE CITY ENGINEER.

GRATE DETAIL

3 SD1.2 DETAIL SCALE 3/4" = 1'-0"

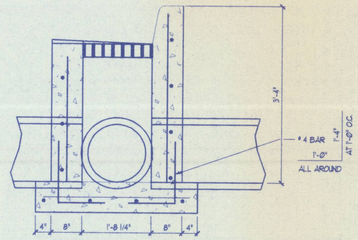

NOTE:

1. TRANSISTION TO STANDARD CURB AND GUTTER IS THE SAME FOR ALL TYPE I, II, III, IV CATCH BASINS.
2. GRATE SIZE IS THE SAME FOR ALL TYPE I, II, III & IV CATCH BASINS.
3. HOT DIP GALVANIZE GRATES AND GRATING SUPPORTS AFTER FABRICATION.

SECTION B-B

4 SD1.2 DETAIL SCALE 3/4" = 1'-0"

NOTE:
PROVIDE 4" THICKNESS OF 3/4" OR 1" UNTREATED BASE COURSE UNDER SIDEWALKS, DRIVEWAY APPROACHES AND CURB AND GUTTER WHEN SUBGRADE IS CLAY OR C.B.R. IS LESS THAN 10 OR AS DIRECTED BY THE CITY ENGINEER.

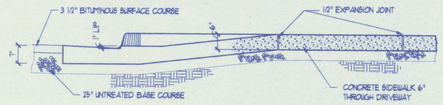

SECTION A-A

5 SD1.2 DETAIL SCALE 1/2" = 1'-0"

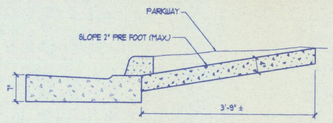

SECTION A-A

TYPICAL WHEEL CHAIR RAMP DETAIL

6 SD1.2 DETAIL SCALE 3/4" = 1'-0"

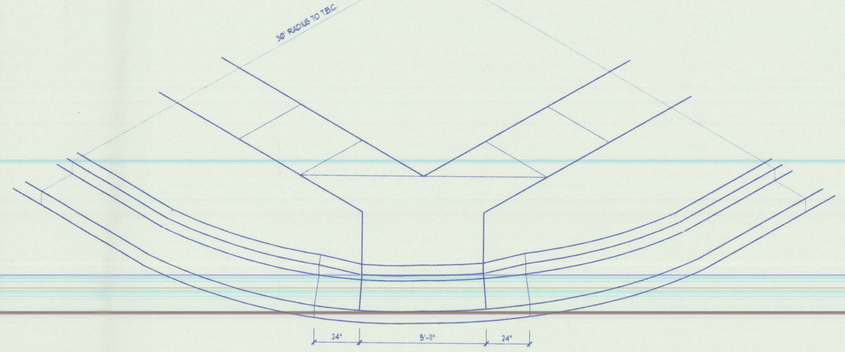

7 SD1.2 PICTORIAL VIEW SCALE NONE = 1'-0"

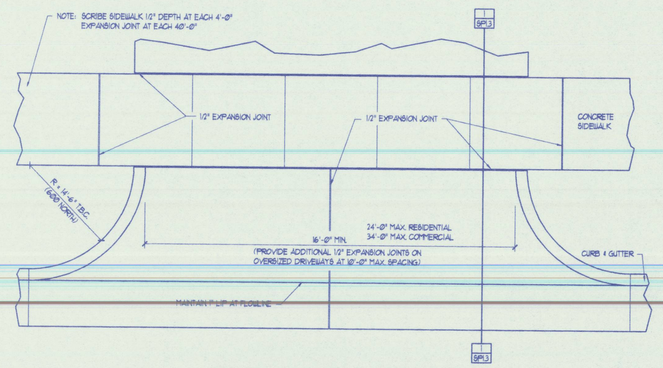

TYPE A DRIVEWAY APPROACH (CURB RADIUS STYLE)

8 SD1.2 PARTIAL PLAN SCALE 3/8" = 1'-0"

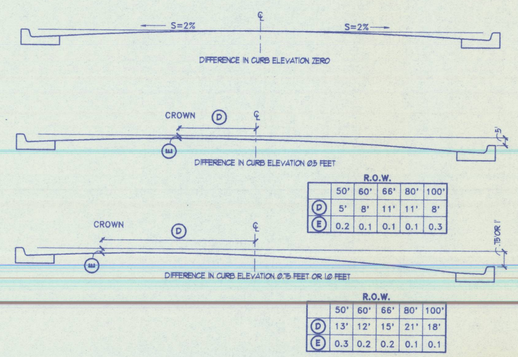

CROWN LOCATION FOR VARIOUS CROSS SLOPES

9 SD1.2 DETAIL SCALE 1/4" = 1'-0"

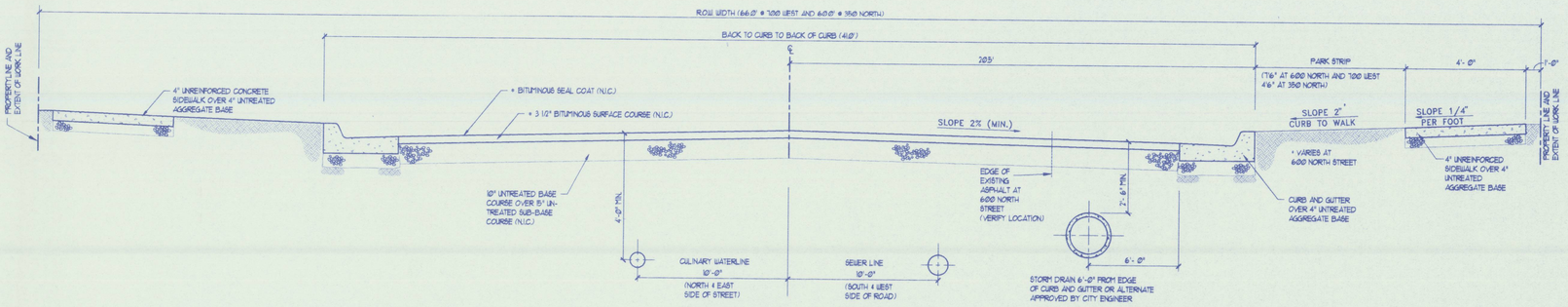

STANDARD URBAN ROADWAY SECTION

10 SD1.2 SECTION SCALE 1/8" = 1'-0"

STATE OF UTAH
NAYLOR WENTWORTH ARCHITECTS
LICENSED ARCHITECT
S86
1102
1074

REVISIONS

NO.	DATE	EXPLANATION	DRAWN	CHECKED BY

THE NEW
ALICE C. HARRIS
INTERMEDIATE SCHOOL
LOCATED IN
TREMONTON, UTAH 84337

NAYLOR WENTWORTH ARCHITECTS
A PROFESSIONAL CORPORATION
175 West 200 South Suite 1000
Salt Lake City, Utah 84101
Tel 801 355-5960
Fax 801 355-5960

SD1.2

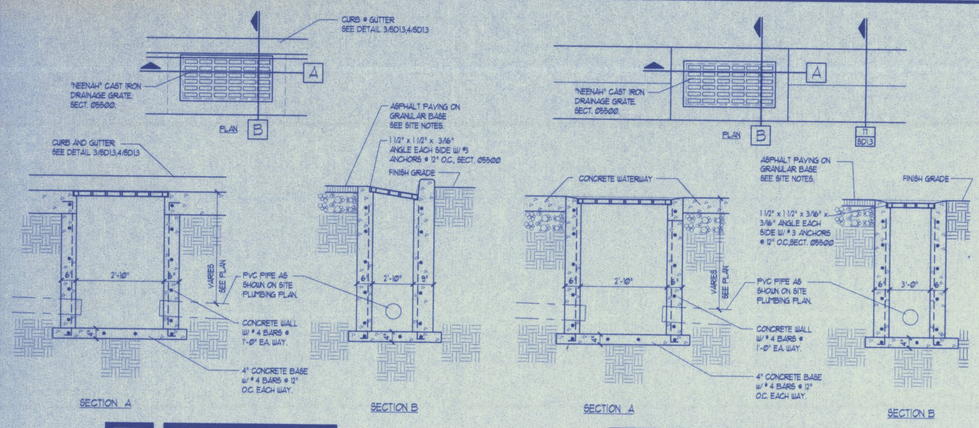

1 SD1.3 DETAIL

2 SD1.3 DETAIL

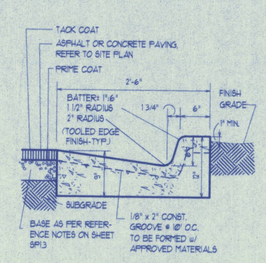

COORDINATE CONSTRUCTION AND INSTALLATION WITH TREMONTON CITY

CURB/GUTTER @ FINISH GRADE

3 SD1.3 DETAIL

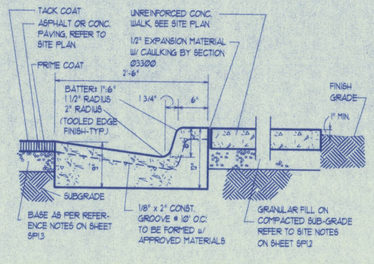

COORDINATE CONSTRUCTION AND INSTALLATION WITH TREMONTON CITY

CURB/GUTTER @ CONC. WALK

4 SD1.3 DETAIL

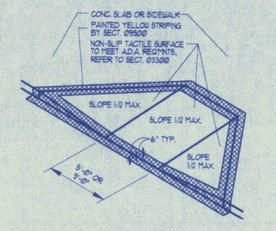

CURB RAMP

5 SD1.3 DETAIL

NOT USED

6 SD1.3 DETAIL

NOT USED

7 SD1.3 DETAIL

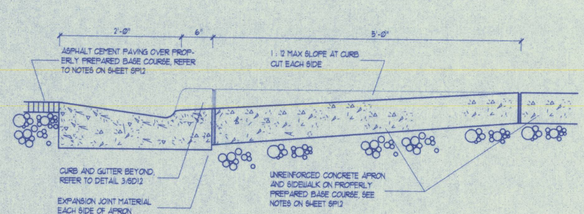

GUTTER/APRON

8 SD1.3 DETAIL

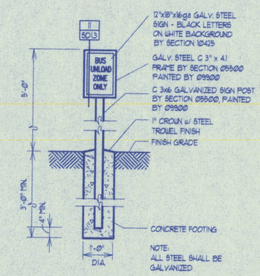

BUS UNLOAD SIGN

9 SD1.3 DETAIL

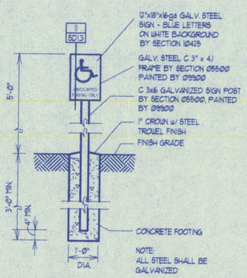

HANDICAP PARKING SIGN

10 SD1.3 DETAIL

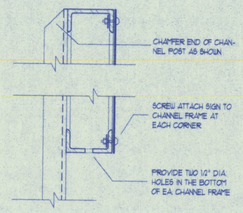

11 SD1.3 DETAIL

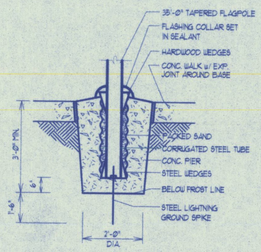

FLAGPOLE BASE

12 SD1.3 DETAIL

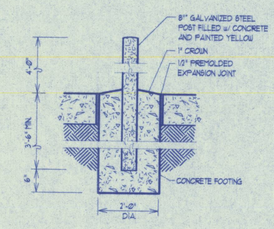

FIXED BOLLARD

13 SD1.3 DETAIL

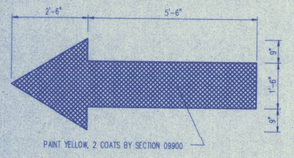

PAINTED DIRECTIONAL ARROW

14 SD1.3 DETAIL

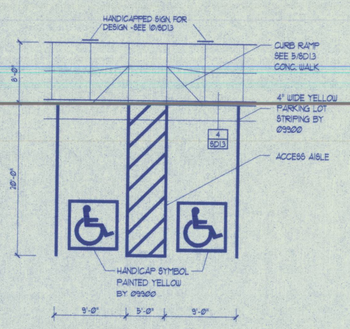

HANDICAP PARKING STALLS

15 SD1.3 DETAIL

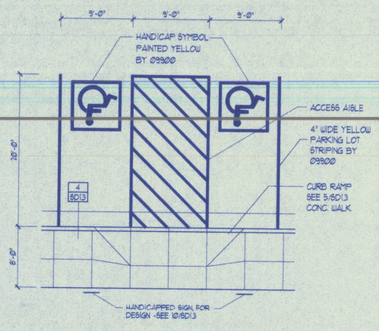

HANDICAP PARKING STALLS

16 SD1.3 DETAIL

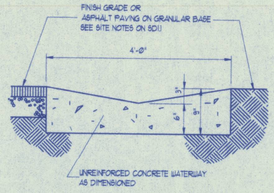

17 SD1.3 DETAIL

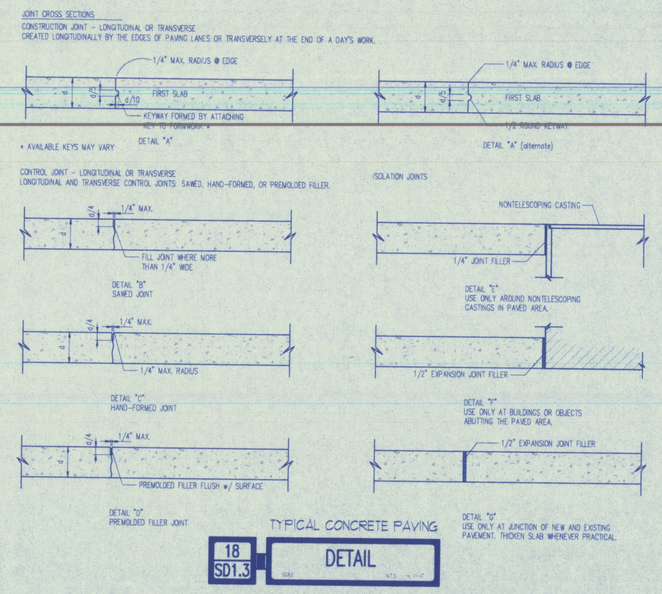

TYPICAL CONCRETE PAVING

18 SD1.3 DETAIL

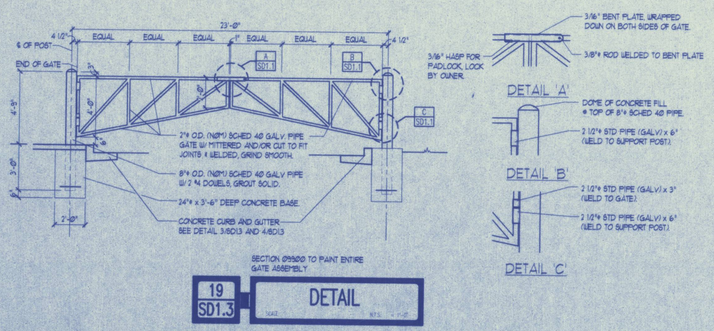

19 SD1.3 DETAIL

STATE OF UTAH
NAYLOR WENTWORTH ARCHITECTS
9156
1102
1074
LICENSED ARCHITECT

REVISIONS

NO.	DATE	EXPLANATION	DRAWN

DRAWN BY: CHECKED BY:

THE NEW
ALICE C. HARRIS
INTERMEDIATE SCHOOL
LOCATED IN
TREMONTON, UTAH 84337

NAYLOR WENTWORTH ARCHITECTS
A PROFESSIONAL CORPORATION
175 West 200 South
Suite 1000
Salt Lake City, Utah 84101
Tel 801 355-5959
Fax 801 355-5960

SD1.3

CENTER OF SECTION 3,
TOWNSHIP 11 NORTH,
RANGE 3 WEST,
SALT LAKE BASE AND
MERIDIAN

WEST 1370.38'

Tremonton Intermediate School
Property Description

Beginning at a point which is West 1370.38 feet and South 44.84 feet from the center of Section 3, Township 11 North, Range 3 West, Salt Lake Base and Meridian (as set by Don Johnston); said center of Section is West 2638.67 feet and South 35.89 feet from the east 1/4 corner of said Section 3; thence South 89° 20' 50" West 531.00 feet; thence South 0° 18' 53" West 1103.06 feet to the north line of 350 North Street as determined by a Quit Claim Deed in Book 405 on Page 695 on file with the Box Elder County Recorder's Office and rebar and cap (as set by others) located by a field survey which represents the northwest and northeast corners of the Robert Lewis Belew Jr. property and the south line of said 350 North Street; thence North 89° 20' 50" East along said north line 531.00 feet to a point which is South 89° 20' 50" West 66.00 feet from the quarter quarter line of the southwest 1/4 of said Section 3, as determined by the afore mentioned rebar and cap; thence North 0° 18' 53" East 1103.06 feet to the point of beginning.

Area = 13.44 acres

Basis of bearing: Due north from the east 1/4 corner to the northeast corner of said Section 3 and South 89° 13 15" West from said east 1/4 corner to the center of Section 3.

NOTE:

This description changes the section corner tie of the record description from the west 1/4 corner of Section 3 to the center of Section 3 and does not refer to the south boundary line of 600 North Street as the location of both are in question because of conflicting information as to the location of the west line of said Section 3.

SURVEYOR'S CERTIFICATE

I, ROBERT D. GUNNELL, DO HEREBY CERTIFY THAT I AM A REGISTERED LAND SURVEYOR, AND THAT I HOLD CERTIFICATE NO. 4860 AS PRESCRIBED UNDER THE LAWS OF THE STATE OF UTAH. I FURTHER CERTIFY BY THE AUTHORITY OF THE OWNERS, I HAVE MADE A SURVEY OF THE LAND SHOWN ON THIS DRAWING AND DESCRIBED HEREON. I REPRESENT THAT THE CORNERS HAVE BEEN STAKED IN THE FIELD AS SHOWN ON THIS PLAT. THE PROPERTY LINES AND CORNERS HAVE BEEN DETERMINED BY VARIOUS CALLS AS STATED IN THE DEED FURNISHED BY THE SCHOOL DISTRICT, AND FROM SURVEY POINTS PREVIOUSLY SET BY OTHERS. THE CONTROL WAS FROM THE CENTER SECTION POINT AS SET BY OTHERS. THE DESCRIPTION OF THE PARCEL SHOWN HEREON IS STAKED WITH THE CORRECT LOCATION AS DESCRIBED. THE WIDTH AND R/W LINES OF 600 NORTH STREET ARE IN QUESTION AT THIS TIME AND MAY CHANGE IN THE NEAR FUTURE.

ROBERT D. GUNNELL _____ DATE _____

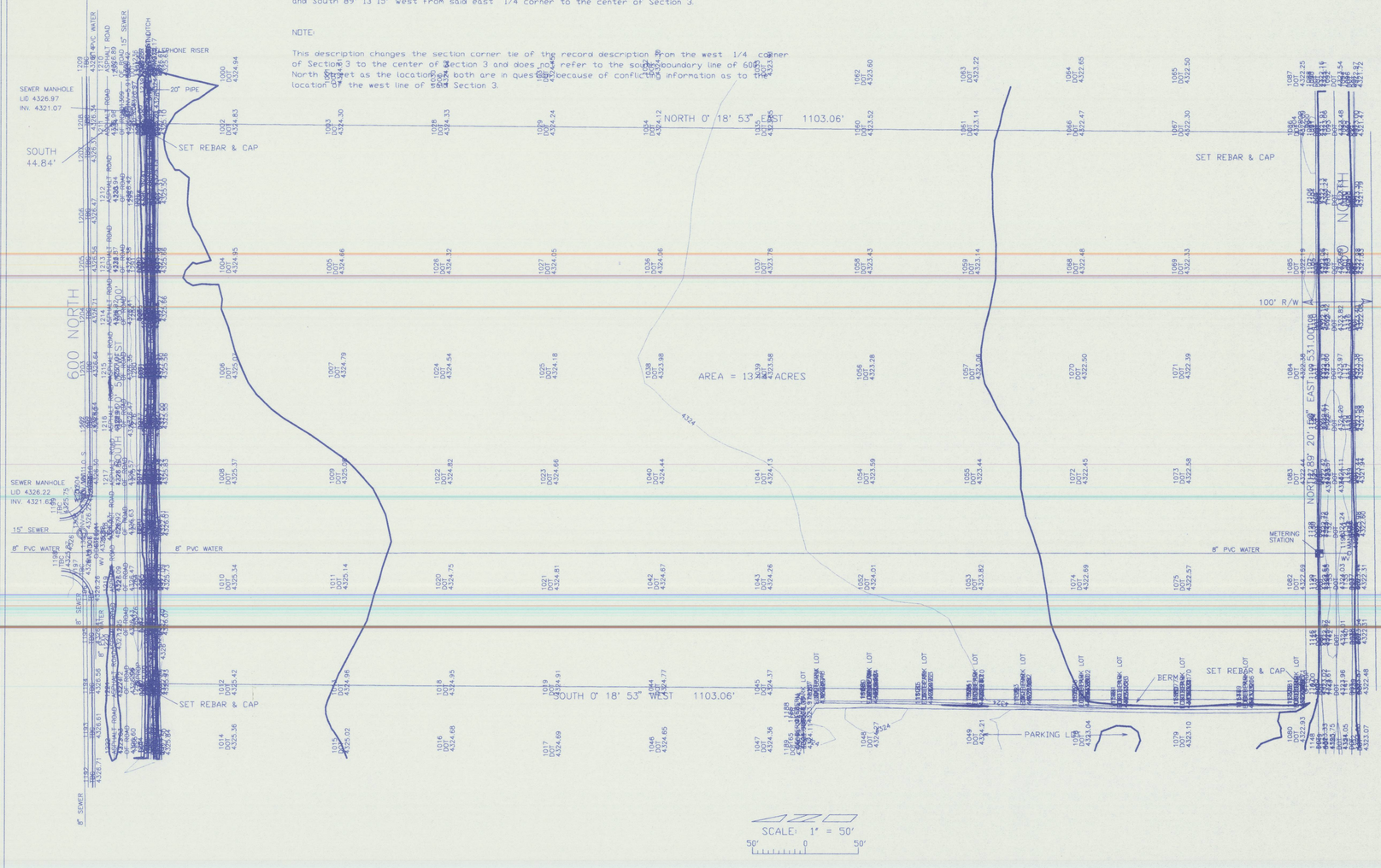

SCALE: 1" = 50'
50' 0 50'

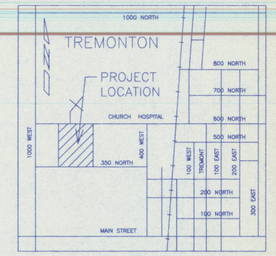

VICINITY MAP

1307 4.5ft 4.68in 4.68in	RB&G ENGINEERING INC.	1435 WEST 820 NORTH PROVO, UTAH 84601-1343 801 374-5771 PROVO 801 521-5771 SALT LAKE CITY	NO. / AUTHORIZED BY / REVISION / MADE BY / DATE	DESIGN BY ROBERT D. GUNNELL DRAWN BY B.A./J.M.M. CHECKED BY SCALE HORIZ. 1" = 50'-0" VERT. DATE AUGUST 17, 1993	BOX ELDER SCHOOL DISTRICT 230 WEST SECOND SOUTH BRIGHAM CITY, UTAH 84302	TREMONTON INTERMEDIATE SCHOOL	TOPOGRAPHIC AND PROPERTY SURVEY	JOB NO. 9309.065 FILE NO. 28 SHEET OF SHEETS REV NO.

SP1.1

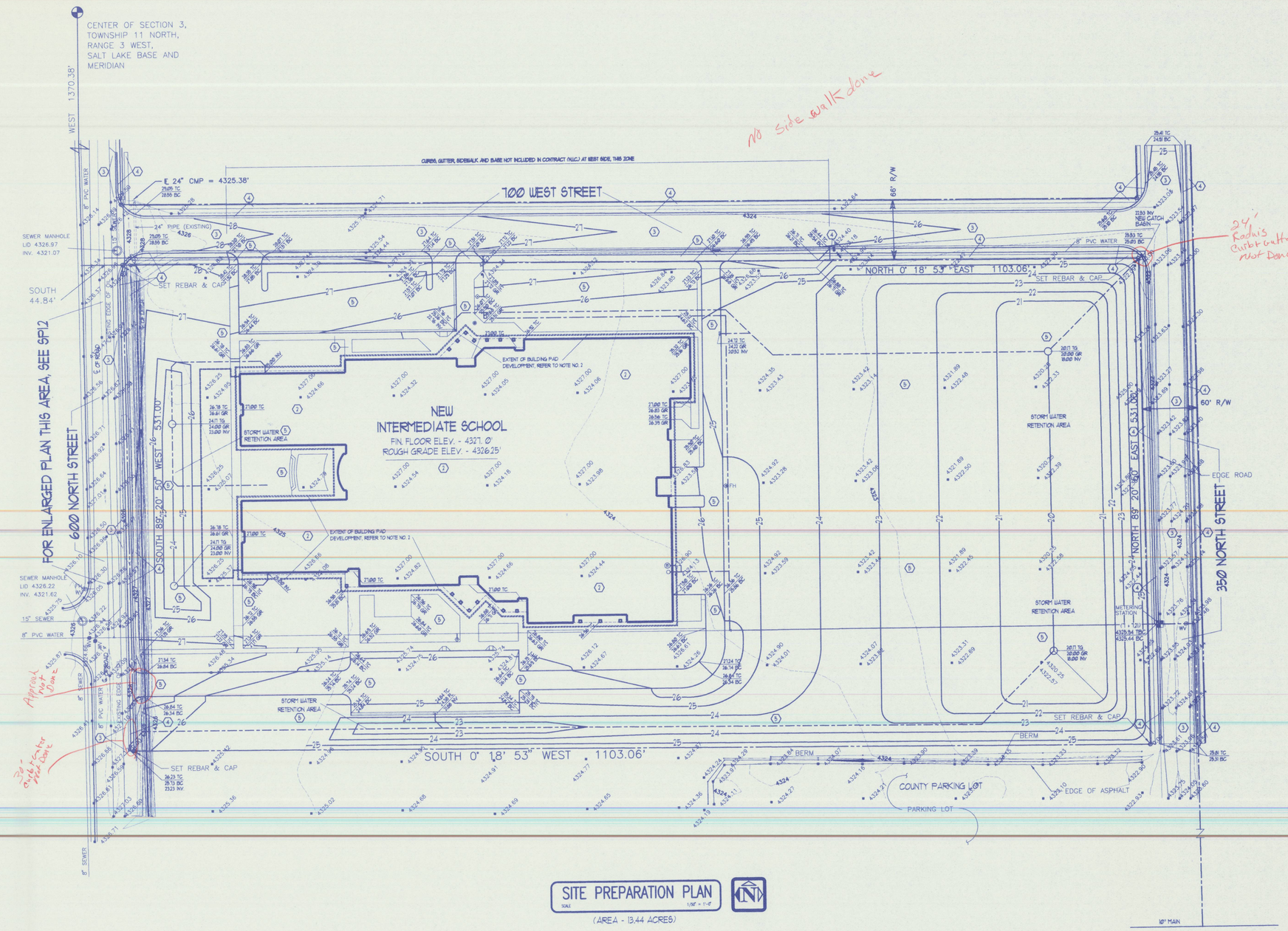

SITE PREPARATION PLAN
SCALE 1/50" = 1'-0"

(AREA - 13.44 ACRES)

SITE PREPARATION NOTES

1. SITE STRIPPING: ON ALL AREAS OF THE BUILDING PAD AND ROADWAYS (IF REQUIRED), STRIP, LOAD AND REMOVE ALL NATURAL GRASSES, WEEDS, AND ORGANIC GROWTH AND ROOT STRUCTURE (APPROXIMATELY 4 INCHES).

2. PREPARATION OF BUILDING PAD: UNDER ENTIRE NEW BUILDING AREA AND FOR A DISTANCE OF 5'-0" OUTSIDE OF BUILDING PERIMETER.
   - A. STRIPPING AS PER NOTE NO. 1.
   - B. EXCAVATE APPROXIMATELY 8" OF REMAINING BROWN TO BLACK CLAY LAYER (12" TOTAL, INCLUDING STRIPPING PER NOTE NO. 1) STOCKPILE EXCAVATED MATERIAL AS DIRECTED BY THE ARCHITECT. THIS MATERIAL FOR FUTURE CONSTRUCTION OF WATER RETENTION BERMES AND MISCELLANEOUS LANDSCAPE AREAS.
   - C. IF MOISTURE CONDITIONS PERMIT, THE SUB-SURFACE MATERIAL SHALL BE SCARIFIED TO A DEPTH OF 8" AND REDENSIFIED TO AN IN-PLACE UNIT WEIGHT EQUAL TO 95% OF THE MAXIMUM LABORATORY DENSITY AS DETERMINED BY ASTM D 1557-91. IF SCARIFICATION PROCEDURE ABOVE CANNOT BE ACCOMPLISHED, CONTACT THE GEOTECHNICAL ENGINEER FOR DIRECTION PRIOR TO PROCEEDING.
   - D. IN ALL AREAS REQUIRING FILL, CONSTRUCT ENGINEERED COMPACTED FILL OF IMPORTED GRANULAR MATERIAL IN LIFTS NOT TO EXCEED 8" OF UNCOMPACTED DEPTH AND SHOULD BE DENSIFIED TO AN IN-PLACE UNIT WEIGHT EQUAL TO 95% OF THE MAXIMUM LABORATORY DENSITY AS DETERMINED BY ASTM D 1557-91.
   - E. ROUGH GRADE BUILDING PAD TO 1" PLUS OR MINUS OF GRADES POSTED MINUS ALLOWANCE OF 9" (.75'), CONSISTING OF 4" CONCRETE SLAB OVER 5" OF FREE-DRAINING GRANULAR LAYER (CONCRETE SLAB AND FREE-DRAINING GRANULAR LAYER IS NOT IN CONTRACT.)

3. PREPARATION OF BASE FOR ROADWAY DEVELOPMENT: (600 NORTH, 350 NORTH AND 700 WEST STREETS.)
   - A. STRIPPING AS PER NOTE NO. 1 (IF REQUIRED).
   - B. AT 600 AND 350 NORTH STREETS, EXCAVATE AND REMOVE APPROXIMATELY 12" OF EXISTING BROWN TO BLACK CLAY LAYER, LOAD AND REMOVE FROM THE SITE.
   - C. AT 700 WEST STREET, NEW SUB-BASE AND/OR BASE MATERIAL HAS BEEN BROUGHT IN AND PLACED TO BRING ELEVATIONS UP TO NEAR REQUIRED LEVEL. NONE OF THIS SHOULD BE REMOVED EXCEPT IF REQUIRED TO INSTALL NEW CURB, GUTTER AND SIDEWALKS.
   - D. EXCAVATE TO GRADES POSTED MINUS ALLOWANCE FOR 8" OF UNTREATED GRANULAR SUB-BASE, 10" OF UNTREATED GRANULAR BASE AND 3-1/2" OF ASPHALTIC PAVEMENT. ALL MATERIAL TO BE LOADED AND REMOVED FROM THE SITE.
   - E. IF MOISTURE CONDITIONS PERMIT, THE SUB-SURFACE MATERIAL SHALL BE SCARIFIED TO A DEPTH OF 8" AND REDENSIFIED TO AN IN-PLACE UNIT WEIGHT EQUAL TO 95% OF THE MAXIMUM LABORATORY DENSITY AS DETERMINED BY ASTM D 1557-91. IF SCARIFICATION PROCEDURE ABOVE CANNOT BE ACCOMPLISHED, CONTACT THE GEOTECHNICAL ENGINEER FOR DIRECTION PRIOR TO PROCEEDING.
   - F. ALL REMAINING ROAD DEVELOPMENT WORK, INCLUDING SUB-BASE, BASE AND ASPHALT PAVING IS NOT IN THE CONTRACT.
   - G. FOR PREPARATION OF BASE FOR CURB AND GUTTER AND CONCRETE WALKS, REFER TO NOTE NO. 4.

4. PREPARATION FOR UNREINFORCED CONCRETE WALKS AND CURB AND GUTTER ADJACENT TO ROADWAY DEVELOPMENT:
   - A. STRIPPING AS PER NOTE 1 ABOVE.
   - B. IF REQUIRED, EXCAVATE 12" OF EXISTING BROWN TO BLACK CLAY LAYER (WHERE PREVIOUS ROAD BASE HAS NOT BEEN LAID) LOAD AND REMOVE FROM THE SITE.
   - C. IF MOISTURE CONDITIONS PERMIT, THE SUB-SURFACE MATERIAL SHALL BE SCARIFIED TO A DEPTH OF 8" AND REDENSIFIED TO AN IN-PLACE UNIT WEIGHT EQUAL TO 95% OF THE MAXIMUM LABORATORY DENSITY AS DETERMINED BY ASTM D 1557-91. IF SCARIFICATION PROCEDURE ABOVE CANNOT BE ACCOMPLISHED, CONTACT THE GEOTECHNICAL ENGINEER FOR DIRECTION PRIOR TO PROCEEDING.
   - D. IN ALL AREAS REQUIRING FILL, CONSTRUCT ENGINEERED COMPACTED FILL OF IMPORTED GRANULAR MATERIAL IN LIFTS NOT TO EXCEED 8" OF UNCOMPACTED DEPTH SHOULD BE DENSIFIED TO AN IN-PLACE UNIT WEIGHT EQUAL TO 95% OF THE MAXIMUM LABORATORY DENSITY AS DETERMINED BY ASTM D 1557-91.
   - E. ROUGH GRADE TO 1" PLUS OR MINUS OF GRADES POSTED MINUS ALLOWANCE FOR EITHER 4" CONCRETE WALK OR CONCRETE CURB AND GUTTER OVER 4" OF UNTREATED GRANULAR BASE COURSE.

5. EXCEPT AS ITEMIZED ABOVE, ALL REMAINING SITE PREPARATION, DEVELOPMENT, GRADING, EXCAVATION, AND COMPACTED FILL ARE NOT INCLUDED. ALL DEVELOPMENT GRADING AND ELEVATIONS ARE FOR CONTRACTOR'S INFORMATION ONLY.

IT IS THE INTENT OF THESE DRAWINGS TO DO SUFFICIENT EARTHWORK AS SPECIFIED ABOVE TO INSTALL CURB, GUTTER AND WALKS AT ROAD DEVELOPMENT AND ALSO THE BUILDING PAD, UP TO ROUGH GRADE TO INSTALL FOOTINGS AND FOUNDATIONS. REFER TO THIS PLAN AND DETAILS ON SD1.2 FOR EXTENT OF WORK LOCATIONS

STATE OF UTAH
LICENSED ARCHITECT
NAYLOR WENTWORTH ARCHITECTS
985
1102
1074

REVISIONS

NO.	DATE	EXPLANATION	DRAWN

DRAWN BY: CHECKED BY:

THE NEW
ALICE C. HARRIS
INTERMEDIATE SCHOOL
LOCATED IN
TREMONTON, UTAH 84337

NAYLOR WENTWORTH ARCHITECTS
A PROFESSIONAL CORPORATION
175 West 200 South Suite 1000
Salt Lake City, Utah 84101
Tel 801 355-5959
Fax 801 355-5960

SP1.2

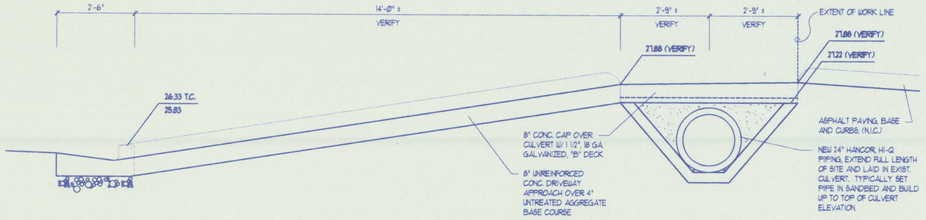

1 SP1.3 SECTION SCALE 1/2" = 1'-0"

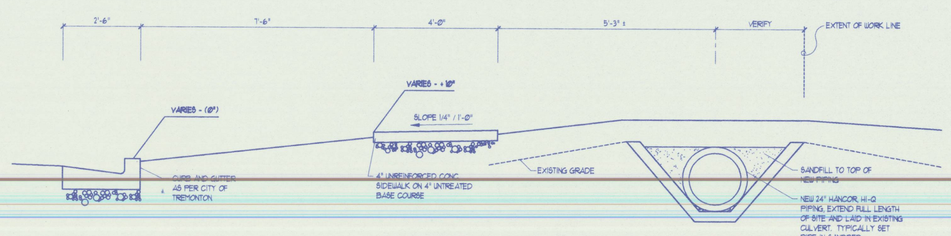

2 SP1.3 SECTION SCALE 1/2" = 1'-0"

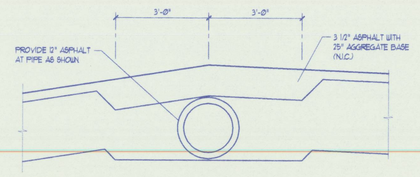

3 SP1.3 SECTION SCALE 1/2" = 1'-0"

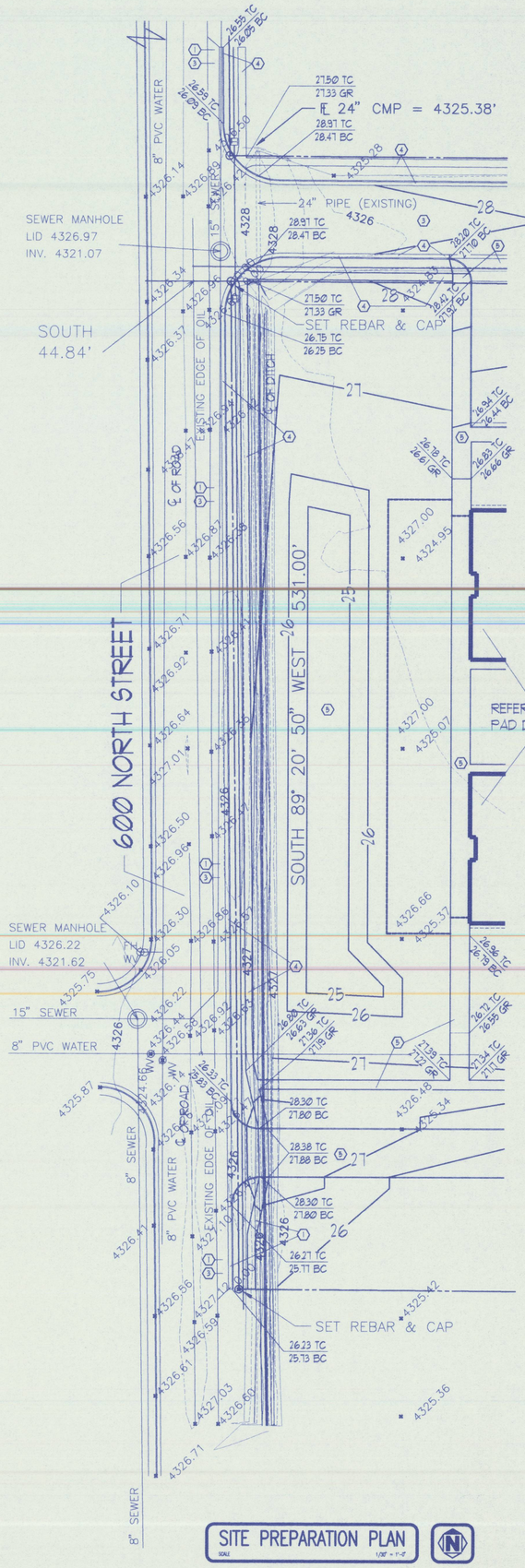

SITE PREPARATION PLAN SCALE 1/16" = 1'-0"

SITE PREPARATION NOTES

(1) SITE STRIPPING: ON ALL AREAS OF THE BUILDING PAD AND ROADWAYS (IF REQUIRED), STRIP, LOAD, AND REMOVE ALL NATURAL GRASSES, WEEDS, AND ORGANIC GROWTH AND ROOT STRUCTURE (APPROXIMATELY 4 INCHES).

(2) PREPARATION OF BUILDING PAD: UNDER ENTIRE NEW BUILDING AREA AND FOR A DISTANCE OF 5'-0" OUTSIDE OF BUILDING PERIMETER.

A. STRIPPING AS PER NOTE NO. 1.

B. EXCAVATE APPROXIMATELY 8" OF REMAINING BROWN TO BLACK CLAY LAYER (12" TOTAL, INCLUDING STRIPPING PER NOTE NO. 1) STOCKPILE EXCAVATED MATERIAL AS DIRECTED BY THE ARCHITECT. THIS MATERIAL FOR FUTURE CONSTRUCTION OF WATER RETENTION BERMES AND MISCELLANEOUS LANDSCAPE AREAS.

C. IF MOISTURE CONDITIONS PERMIT, THE SUB-SURFACE MATERIAL SHALL BE SCARIFIED TO A DEPTH OF 8" AND REDENSIFIED TO AN IN-PLACE UNIT WEIGHT EQUAL TO 95% OF THE MAXIMUM LABORATORY DENSITY AS DETERMINED BY ASTM D 1557-91. IF SCARIFICATION PROCEDURE ABOVE CANNOT BE ACCOMPLISHED, CONTACT THE GEOTECHNICAL ENGINEER FOR DIRECTION PRIOR TO PROCEEDING.

D. IN ALL AREAS REQUIRING FILL CONSTRUCT ENGINEERED COMPACTED FILL OF IMPORTED GRANULAR MATERIAL IN LIFTS NOT TO EXCEED 8" OF UNCOMPACTED DEPTH AND SHOULD BE DENSIFIED TO AN IN-PLACE UNIT WEIGHT EQUAL TO 95% OF THE MAXIMUM LABORATORY DENSITY AS DETERMINED BY ASTM D 1557-91.

E. ROUGH GRADE BUILDING PAD TO 1" PLUS OR MINUS OF GRADES POSTED MINUS ALLOWANCE OF 9" (7%) CONSISTING OF 4" CONCRETE SLAB OVER 5" OF FREE-DRAINING GRANULAR LAYER (CONCRETE SLAB AND FREE-DRAINING GRANULAR LAYER IS NOT IN CONTRACT.)

(3) PREPARATION OF BASE FOR ROADWAY DEVELOPMENT: (600 NORTH, 350 NORTH AND 1200 WEST STREETS.)

A. STRIPPING AS PER NOTE NO. 1 (IF REQUIRED.)

B. AT 600 AND 350 NORTH STREETS, EXCAVATE AND REMOVE APPROXIMATELY 12" OF EXISTING BROWN TO BLACK CLAY LAYER. LOAD AND REMOVE FROM THE SITE.

C. AT 1200 WEST STREET, NEW SUB-BASE AND/OR BASE MATERIAL HAS BEEN BROUGHT IN AND PLACED TO BRING ELEVATIONS UP TO NEAR REQUIRED LEVEL. NONE OF THIS SHOULD BE REMOVED EXCEPT IF REQUIRED TO INSTALL NEW CURB, GUTTER AND SIDEWALKS.

D. EXCAVATE TO GRADES POSTED MINUS ALLOWANCE FOR 15" OF UNTREATED GRANULAR SUB-BASE, 10" OF UNTREATED GRANULAR BASE AND 3-1/2" OF ASPHALTIC PAVEMENT. ALL MATERIAL TO BE LOADED AND REMOVED FROM THE SITE.

E. IF MOISTURE CONDITIONS PERMIT, THE SUB-SURFACE MATERIAL SHALL BE SCARIFIED TO A DEPTH OF 8" AND REDENSIFIED TO AN IN-PLACE UNIT WEIGHT EQUAL TO 95% OF THE MAXIMUM LABORATORY DENSITY AS DETERMINED BY ASTM D 1557-91. IF SCARIFICATION PROCEDURE ABOVE CANNOT BE ACCOMPLISHED, CONTACT THE GEOTECHNICAL ENGINEER FOR DIRECTION PRIOR TO PROCEEDING.

F. ALL REMAINING ROAD DEVELOPMENT WORK, INCLUDING SUB-BASE, BASE AND ASPHALT PAVING IS NOT IN THE CONTRACT.

G. FOR PREPARATION OF BASE FOR CURB AND GUTTER AND CONCRETE WALKS, REFER TO NOTE NO. 4.

(4) PREPARATION FOR UNREINFORCED CONCRETE WALKS AND CURB AND GUTTER ADJACENT TO ROADWAY DEVELOPMENT:

A. STRIPPING AS PER NOTE 1 ABOVE.

B. IF REQUIRED, EXCAVATE 12" OF EXISTING BROWN TO BLACK CLAY LAYER (WHERE PREVIOUS ROAD BASE HAS NOT BEEN LAID). LOAD AND REMOVE FROM THE SITE.

C. IF MOISTURE CONDITIONS PERMIT, THE SUB-SURFACE MATERIAL SHALL BE SCARIFIED TO A DEPTH OF 8" AND REDENSIFIED TO AN IN-PLACE UNIT WEIGHT EQUAL TO 95% OF THE MAXIMUM LABORATORY DENSITY AS DETERMINED BY ASTM D 1557-91. IF SCARIFICATION PROCEDURE ABOVE CANNOT BE ACCOMPLISHED, CONTACT THE GEOTECHNICAL ENGINEER FOR DIRECTION PRIOR TO PROCEEDING.

D. IN ALL AREAS REQUIRING FILL CONSTRUCT ENGINEERED COMPACTED FILL OF IMPORTED GRANULAR MATERIAL IN LIFTS NOT TO EXCEED 8" OF UNCOMPACTED DEPTH SHOULD BE DENSIFIED TO AN IN-PLACE UNIT WEIGHT EQUAL TO 95% OF THE MAXIMUM LABORATORY DENSITY AS DETERMINED BY ASTM D 1557-91.

E. ROUGH GRADE TO 1" PLUS OR MINUS OF GRADES POSTED MINUS ALLOWANCE FOR EITHER 4" CONCRETE WALK OR CONCRETE CURB AND GUTTER OVER 4" OF UNTREATED GRANULAR BASE COURSE.

(5) EXCEPT AS ITEMIZED ABOVE, ALL REMAINING SITE PREPARATION, DEVELOPMENT, GRADING, EXCAVATION, AND COMPACTED FILL ARE NOT INCLUDED. ALL DEVELOPMENT GRADING AND ELEVATIONS ARE FOR CONTRACTOR'S INFORMATION ONLY.

STATE OF UTAH LICENSED ARCHITECT
TAYLOR WENTWORTH ARCHITECTS # 885
1102
1074

REVISIONS

NO.	DATE	EXPLANATION	DRAWN

DRAWN BY: CHECKED BY:

THE NEW
ALICE C. HARRIS
INTERMEDIATE SCHOOL
LOCATED IN
TREMONTON, UTAH 84337

NAYLOR WENTWORTH ARCHITECTS
A PROFESSIONAL CORPORATION
175 West 200 South Suite 1000
Salt Lake City, Utah 84101
Tel 801 355-5959
Fax 801 355-5960

SP1.3